# Tracking for the SuperFRS

In line with accelerator division
(20110810 M.Schwickert)

2011. (Further) detector definition and beginning/continuation of prototyping.
Detector and Ladder positions defined.
2012. DAQ/Controls/Timing framework ready (prototype).
2013. Detector prototypes available: Tests.
Gas/HV and other infrastructure needs defined.
2014. Prepare series production.
2015. Production.
2016. Installation.
2017. Tests with first beam.

# Description of the task:

ProjectStructure < SuperFRS < Nustar Wiki - Windows Internet Explorer

http://nustar-wiki.gsi.de/cgi-bin/view/SuperFRS/ProjectStructure?skin=print.pattern

- Super-FRS Project Structure
  - Project description
  - Subproject descriptions
  - Parameter List

## Super-FRS Project Structure

### Project description

- FBTDR from 2008

### Subproject descriptions

- description: subproject Target Area
- description: subproject Separator
- description: subproject Beam Diagnostics
- description: subproject Buildings

### Parameter List

- Parameter list from 15 July 2011

-- HelmutWeick - 28 Sept 2011

| Attachment | Action | Size | Date | Who | Comment |
|---|---|---|---|---|---|
| description_target_area-14012011.pdf | manage | 57.1 K | 27 Feb 2011 - 13:01 | HelmutWeick | description of subproject target area |
| description_Buildings_03022011.pdf | manage | 82.8 K | 03 Feb 2011 - 11:22 | HelmutWeick | subproject Buildings, description |
| Beam_Diagnostics-03022011.pdf | manage | 34.1 K | 03 Feb 2011 - 11:22 | | |
| description_Separator_03022011.pdf | manage | 46.1 K | 03 Feb 2011 - 11:23 | | |
| ParameterlistSuper-FRS110715.pdf | manage | 1654.0 K | 28 Sep 2011 - 10:09 | | |

http://nustar-wiki.gsi.de/
 SuperFRS

# Delta E Measurements:

## TEGIC

Fast ΔE counter

100 kHz – 10MHz, res. 1-2%,

large dynamic range

- TEGIC (RIKEN, ca. 1MHz)

Beam

K. Kimura et al.,
Nucl. Instr. and Meth. A538(2005)608

P10 425mm normal pressure
Electrodes(anode/cathode) 4μm×25 Mylar
14 mg/cm²
Distance(anode-cathode) 2cm
Detector Window 150μm Kapton

Probem(s)

Drift times ~ few μs

Pile up !

- no analog shaping,
sample signal directly

# System design

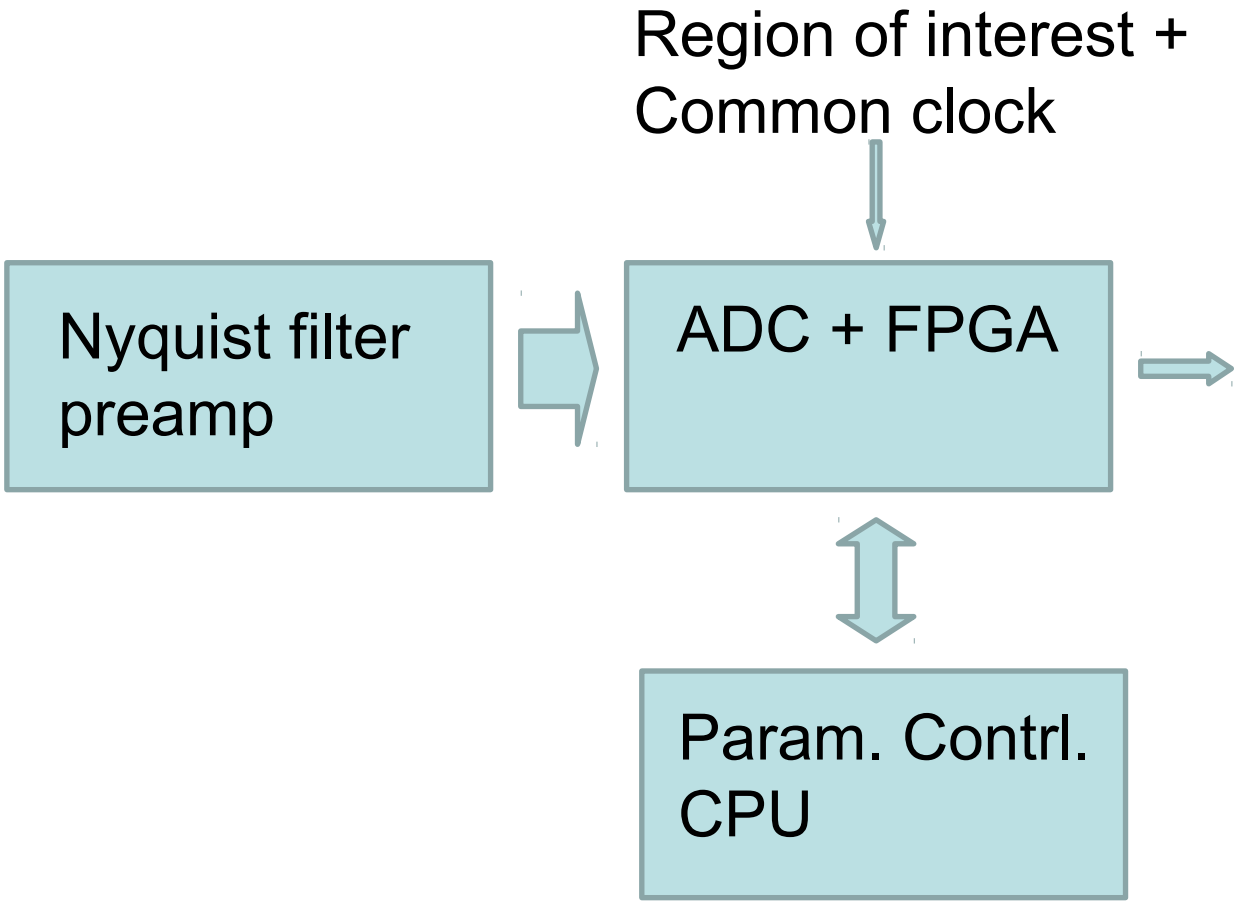


150 Mbytes/s in
40 kByte/s out
@ 10kHz event
rate/all per ch. !

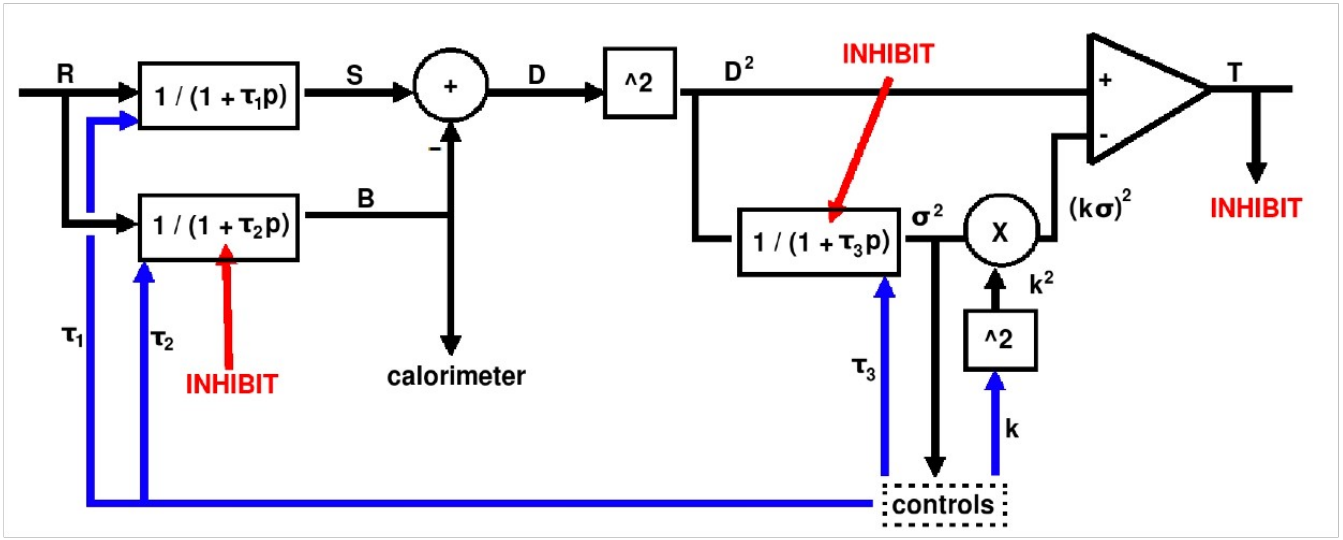


Baseline follower based on 3 fold low-pass filter

- **R**aw, **S**ignal, **B**aseline  **D**ifference ▪ **D²** (Energy)
- **calorimeter, σ²**  histograming  controls
- Inhibit ▪ **Bimodal** filter

- controls ▪ filter parameters

**Benefit: kσ Trigger i.e. most precise & "quantitative" treshold**
**  Potential problem: Spikes**



Heinrich Wörtche

# Results: Baseline Si PSP

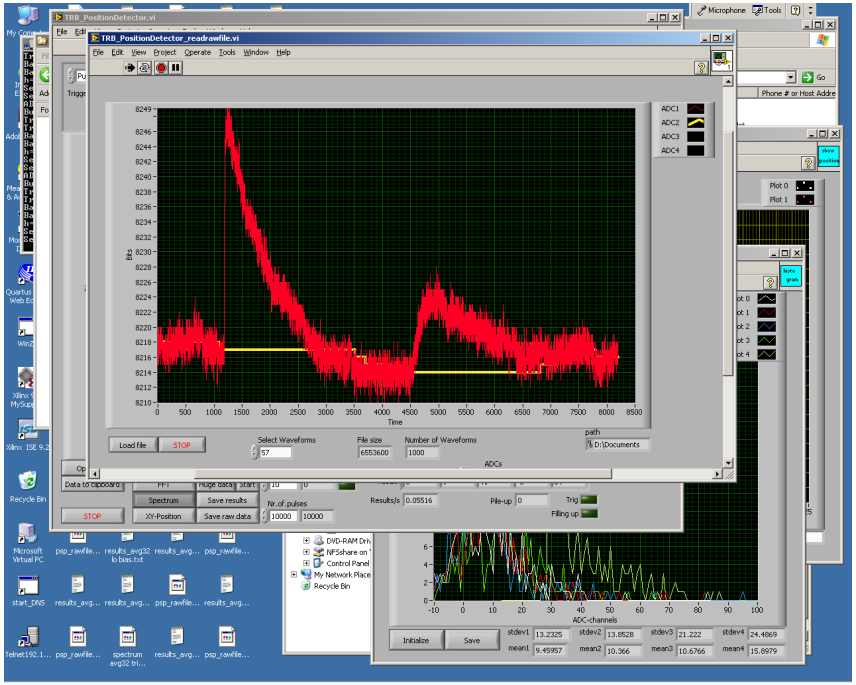


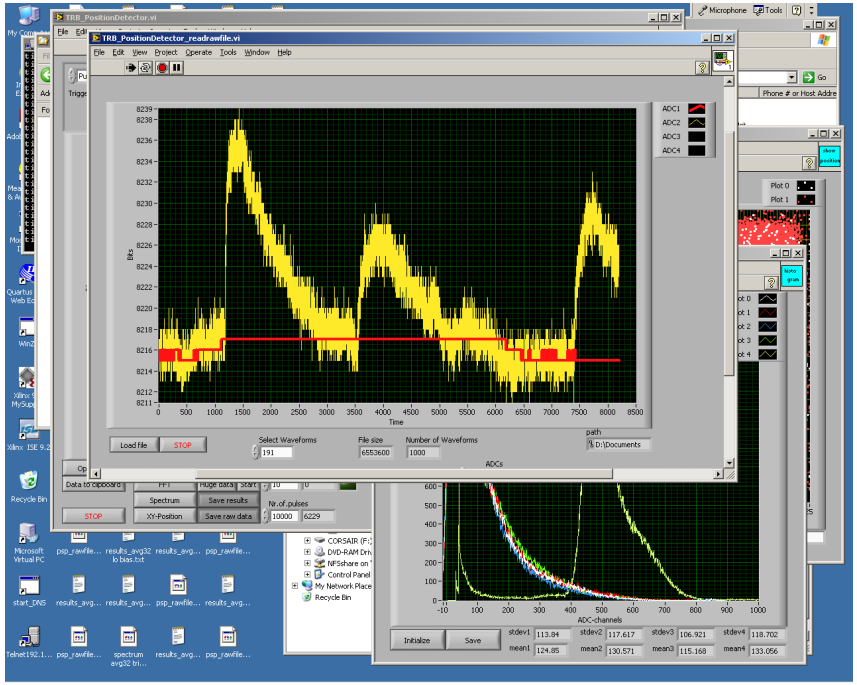


Baseline follower works !
(Bimodal Filter)

Treatment of double hits !

# High rates: On line Pile up correction

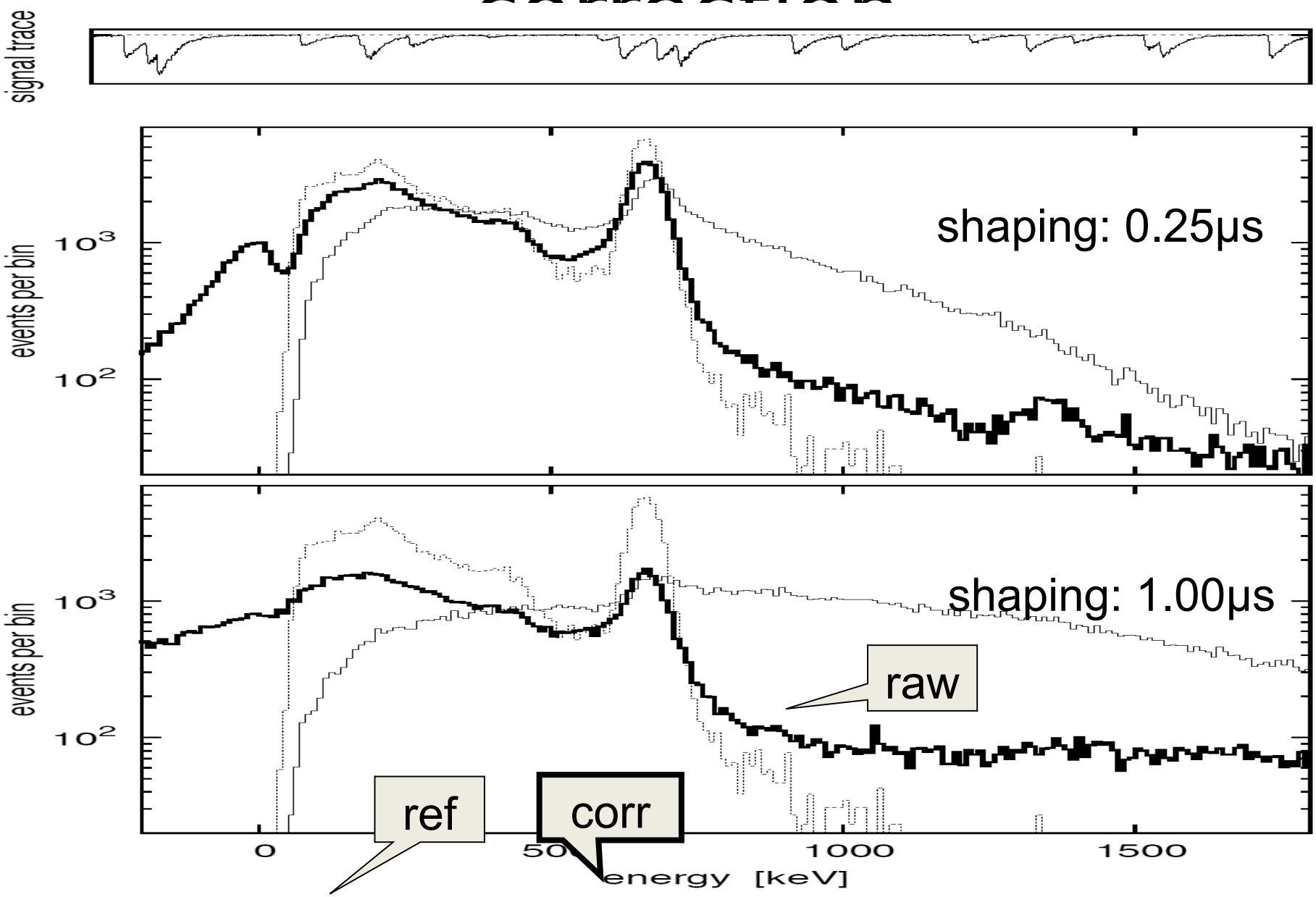


2'x2' NaI, 137Cs, ca. 1MBq



M. Vencelj – GSI/JSI/KVI/INCAS³

# Tracking using a few channesl!
# 12C:  550-700 MeV/u ; 2-50 kEv/s

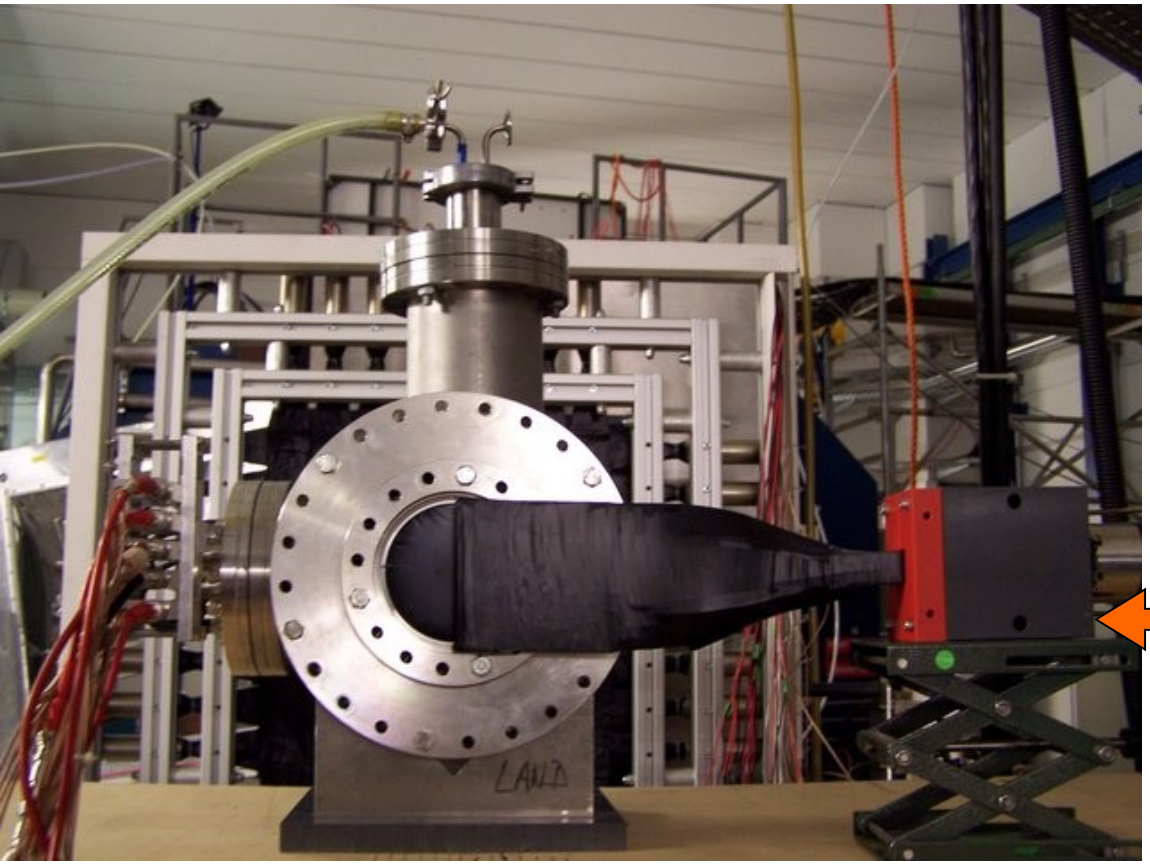

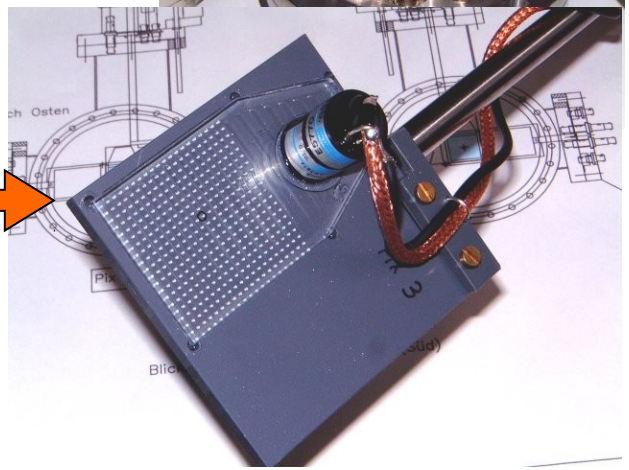

# Online Position and amplitude reconstruction

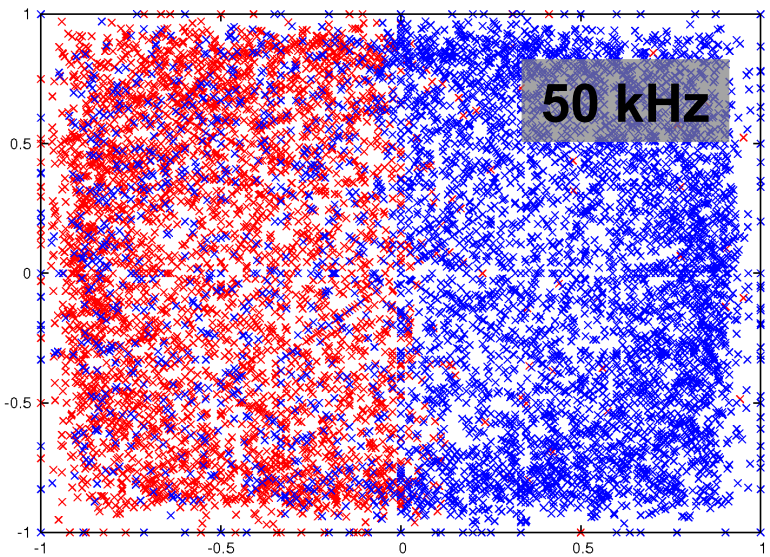


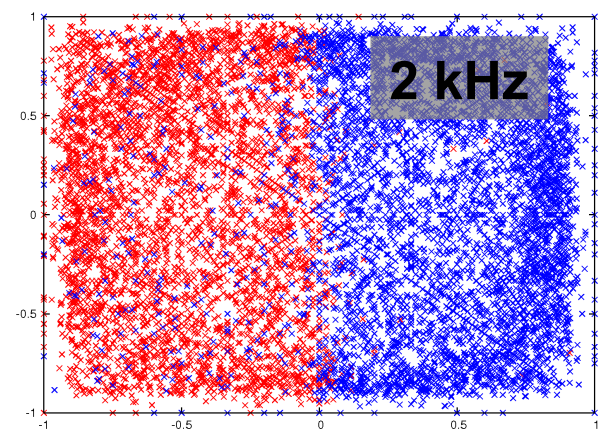


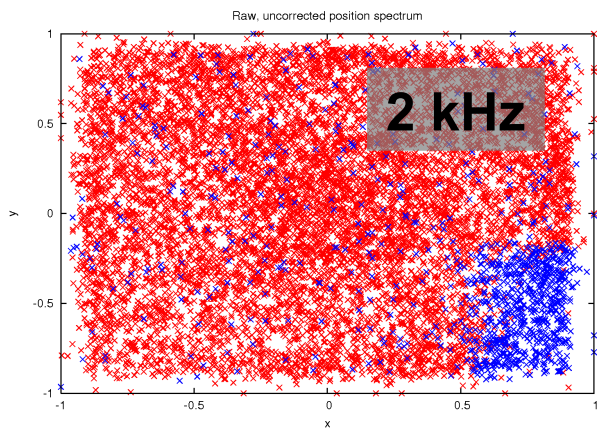


minimal distortions

Computation in FPGA:

i. @ full rate ( i.e. 50+ kHz, theoretical limit: ADC speed ! )

ii. no correction yet

 development of a “slow process”

# Commercial VME module implementation

- Open Firmware (SIS3302, SIS3320)
  - Agreement 20090507
    KVI/GSI/Struck (P.Schakel/V.Stoica/H.S.)
- MBS integration (N.Kurz)
  - Agreement 20100927 (Struck/GSI)
- Package for distribution
  available
- Implementation
  on FEBEX
- MUSIC test 09/10
  - Beam tests ! (FRS000)

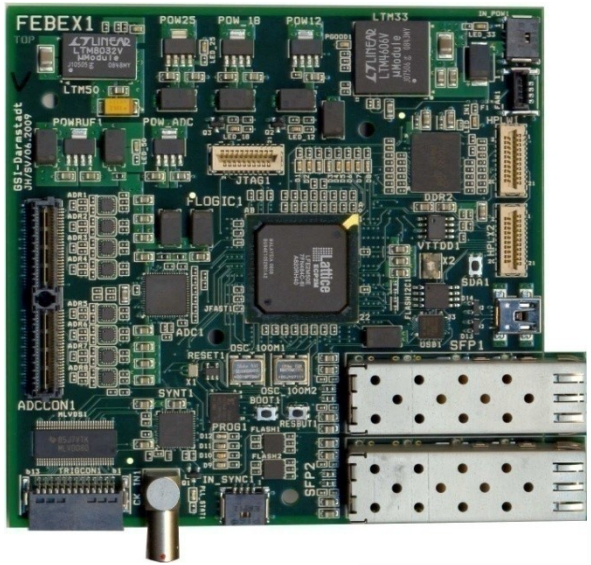

# Token Ring Scheme (NXYTER)

- “deadtime free”/no trigger out

Ch. Schmidt (GSI)

## Sparse & derandomized readout

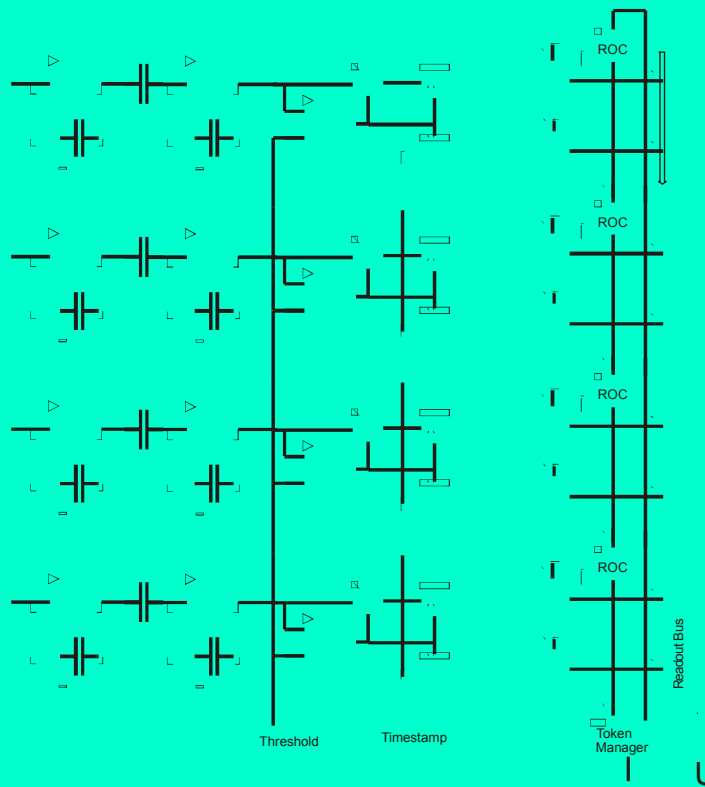


- Periodic readout at 20MHz
- Token asynchronously passes from channel to channel in search of data
- Within one readout cycle token could pass through all channels
- If token encounters occupied channels, data readout is initiated.
- After readout the token passes to the next channel.

**20 MHz/128 Ch ≈ 160 kHz**

**ENOB 10.4**

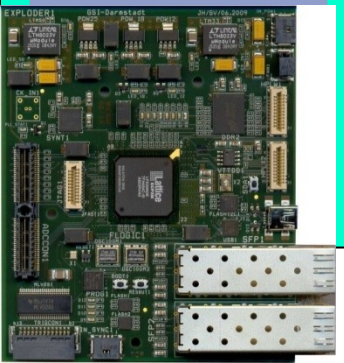

Ulrich Trunk
Physikalisches Institut der Universität Heidelberg

# Other tracking ideas

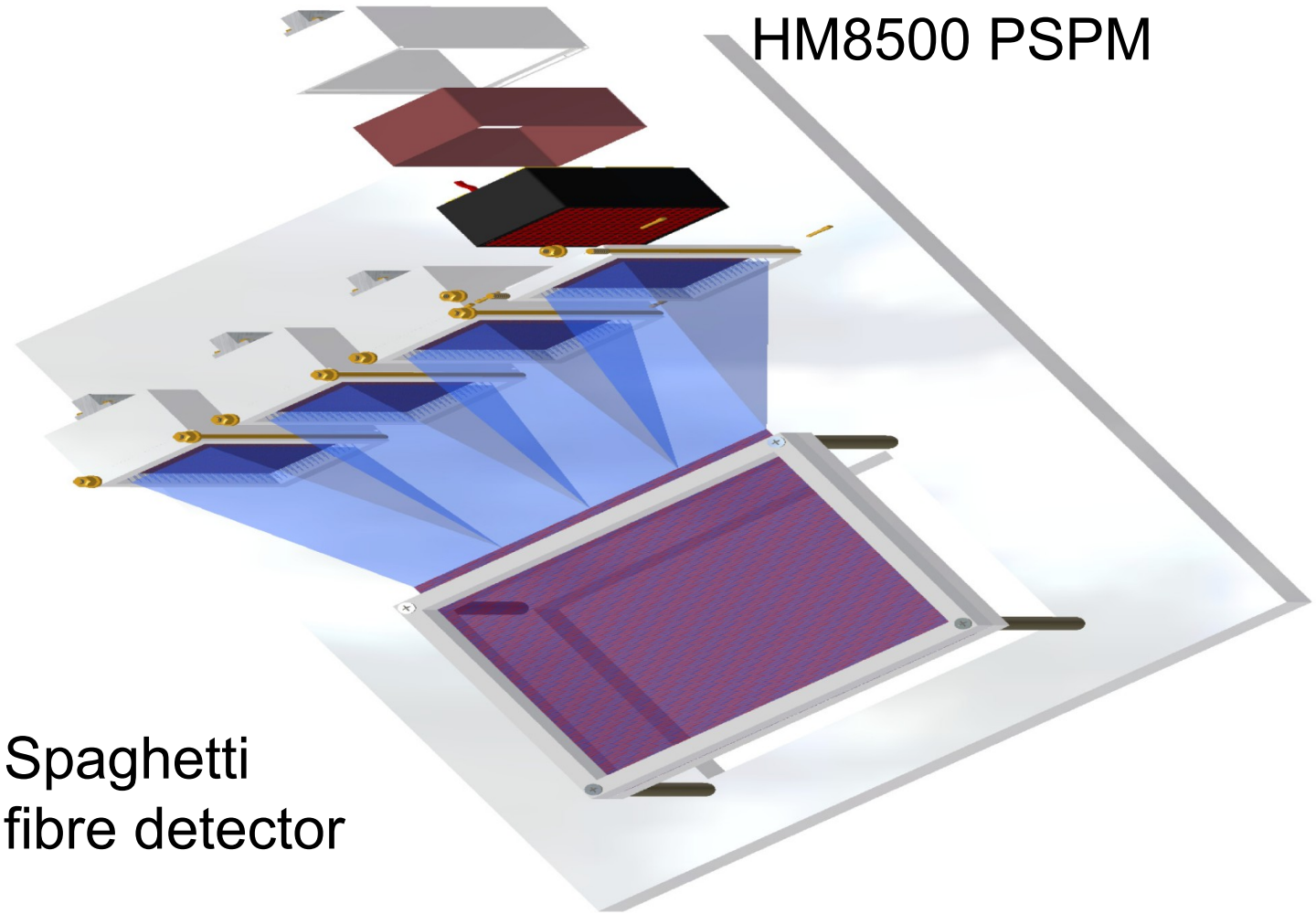


Spaghetti
fibre detector

# CBM RIČH

Nuclear Instruments and Methods in Physics Research A 639 (2011) 307–310

Contents lists available at ScienceDirect

Nuclear Instruments and Methods in Physics Research A

journal homepage: www.elsevier.com/locate/nima

Results from first beam tests for the development of a RICH detector for CBM

J. Eschke [a,*], C. Höhne [a,b]

[a] GSI Darmstadt, Germany
[b] University Gießen, Germany

NIM A 639 (2011) 307–310

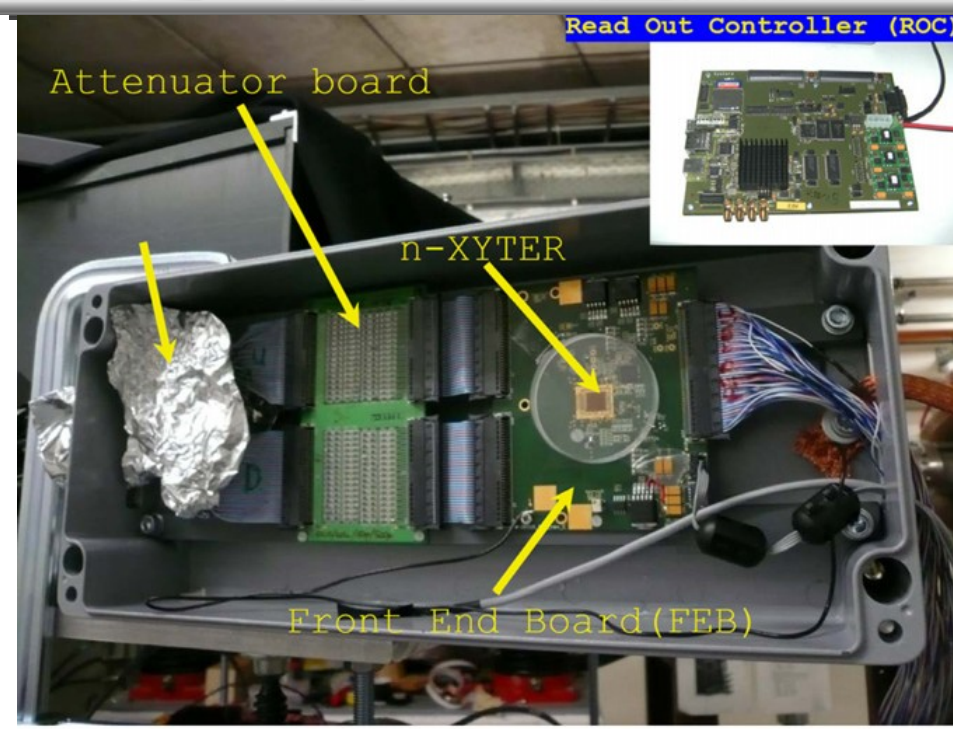


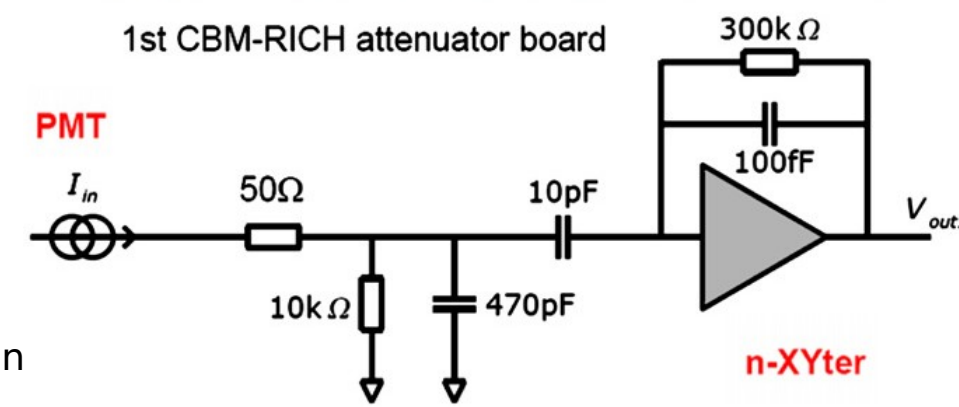


Fig. 3. Photograph of the FEE chain with Charge Attenuator Board, Front End Board with n-XYTER chip and Read Out Controller (ROC) used for the test beam datataking. The Charge Attenuator Board has been designed, simulated and tested for the attenuation of MAPMT signals with a divisionfactor 1 /47.

in

# Front-End Electronics XYTER testing board

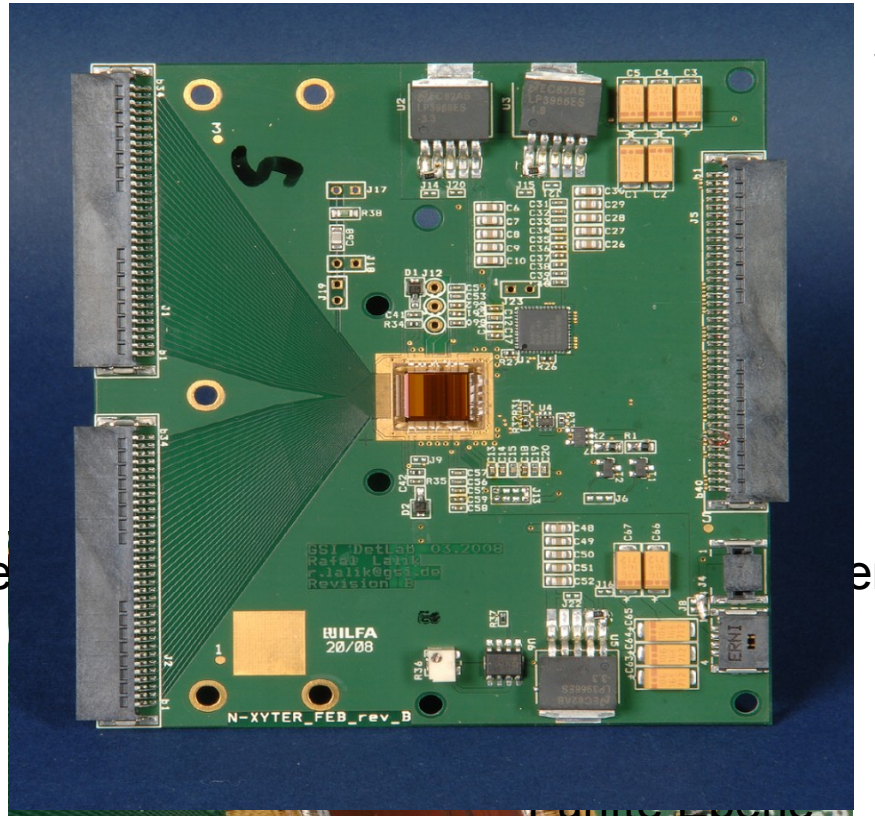


Simple hybrid PCB with
- signal fan-in
- ADC
- interconnect to DAQ chain (SysCore,Exploder)
- CBM beam time September 2008: whole signal chain operative

Te en

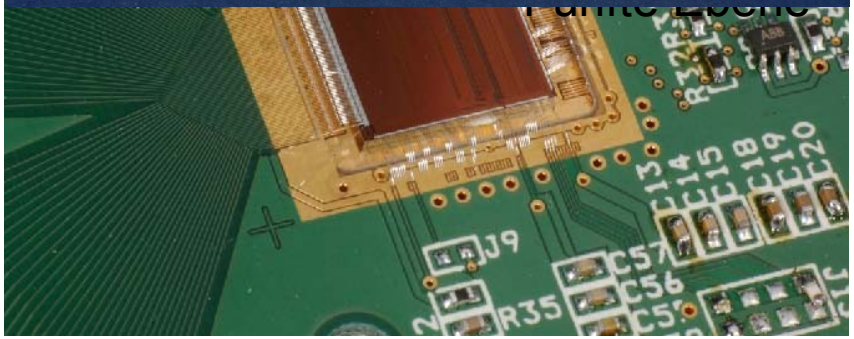

'Chip-In-Board'
- avoids space eating vias
- allows pitch adaptation:
  - 50,7 µm on chip
  - 101,4 µm on PCB (two levels)
  - 10 Rev. C boards, fully functional

# Analogue Pulses, Peaking Time, Front-End Noise

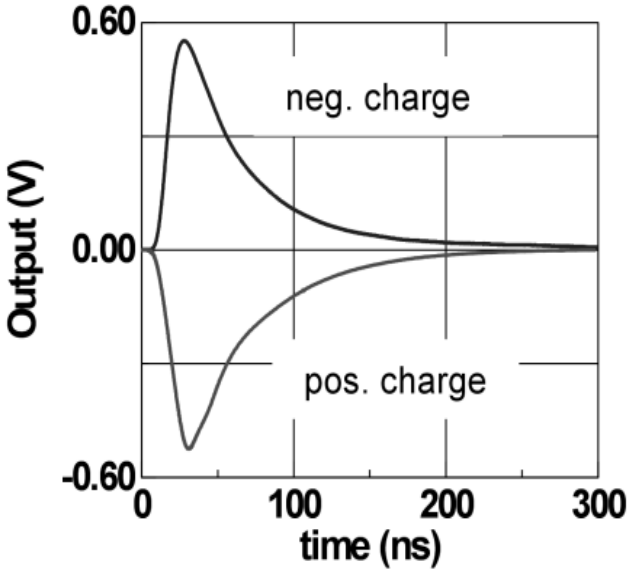


a)

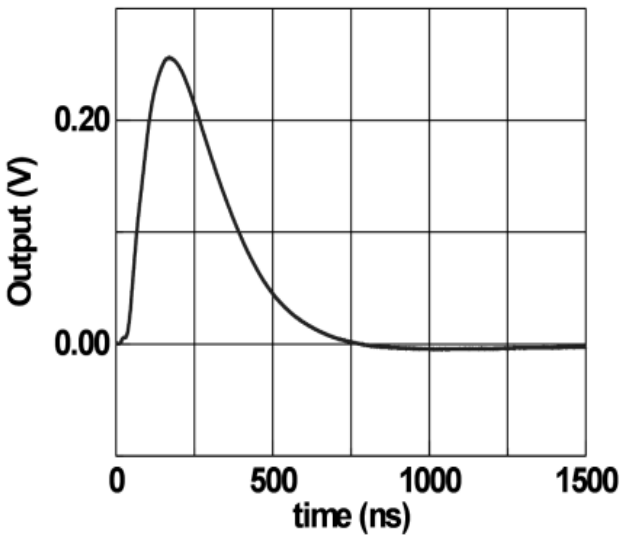


b)

| | FAST channel | SLOW channel |
|---|---|---|
| ENC | 26.9 e/pF + 200 e | 12.7 e/pF + 233 e |
| peaking timea (1% to 99%) | 18.5 ns | 139 ns |

Engineered for
30 pF, giving 1000 e 600 e

power consumption: 12.8 mW per channel !

# Summary

DIGITAL PSA

- Digital PSA  needed for high rates
- usabe also in triggered readout ▪ region of interest
  - Strongly reduced data stream !

NXYTER

- Engineering run done ▪ chips again available
- System integration tests still not complete ▪ Delay

- Well integrated in ‚usual‘ readout chain
- Multihit capable/deadtime-free readout