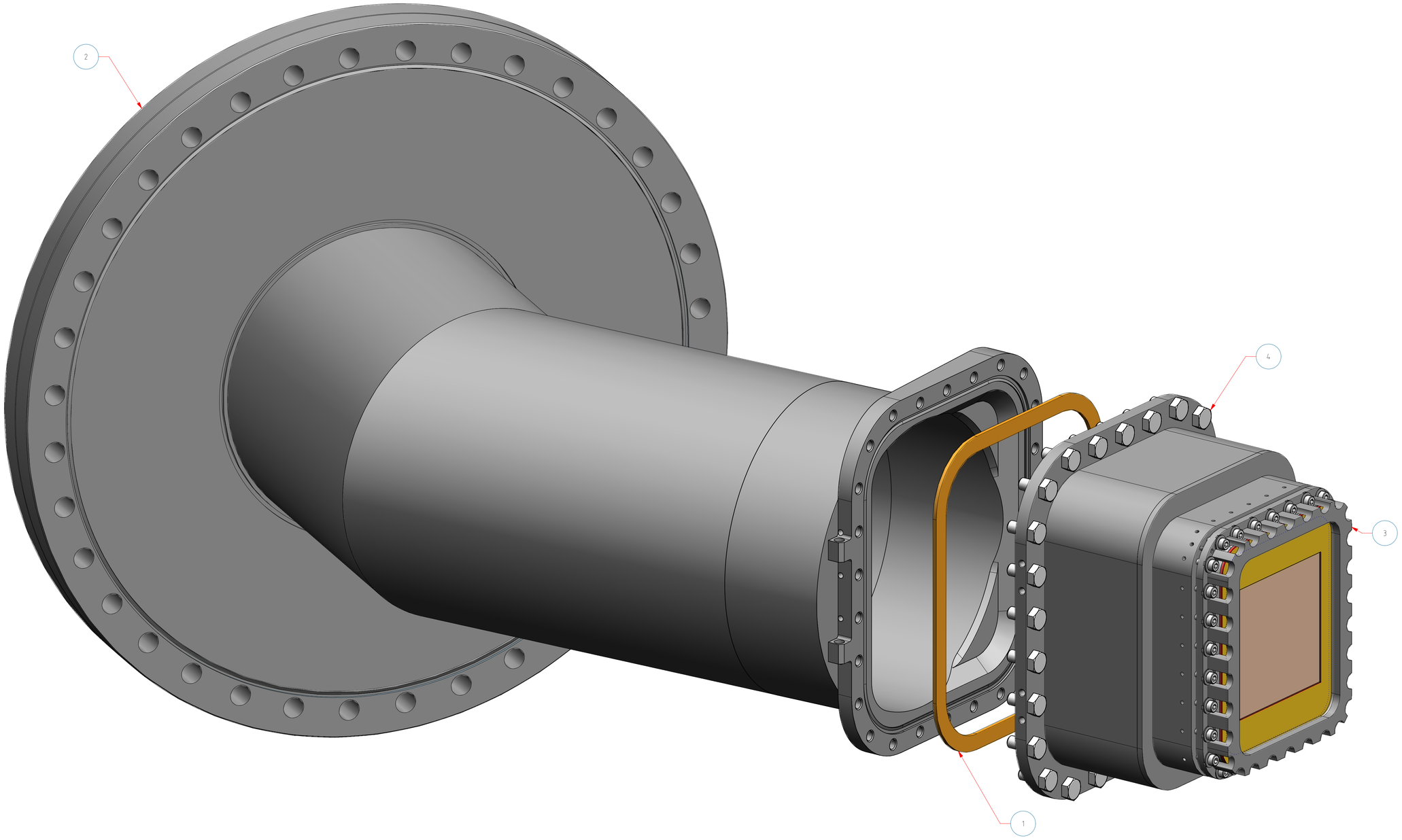

Pos. No	QTY.	Filename	Name	Material	Remarks
4	26	DIN933 M6 X 14	Hex head bolt	RVS-A4	
3	1	3;1003;3440; DSSD ASSY	Detector holder		-
2	1	3;1003;3300;BACK POCKET B			
1	1	3;1003;1000-01;CF COPPER SEAL	Copper seal	OFHC	-

Shape- and dest tol. acc NEN-ISO 1101 | Dim tol. acc NEN-ISO 406 | General Tolerances NEN-ISO 2768-1m - 2768-2K | Roughness acc. NPR 3634 | mm | Scale 1:1

	Date	Name
Drawn	05-2012	M Lindemulder
Checked	-	-

Project: EXL Proto
Group: GSI NUSTAR
Name: Detector unit B
Drawing number: 3;1003;3000_dwg
Sheet 1/1
A1

Projectcode: 623001
Werkorder: G1003
Dimensions: -
Material: ☑
Mass [kg]: 25,5

Revision | Date

Kernfysisch Versneller Instituut
Zernikelaan 25 9747AA Groningen
+31 (0)50 363 3549 / www.kvi.nl

NEN ISO 2768-2K Geometrical tolerances	Nominal dims. mm. / Tolerance mm	10-30	30-100	100-300	300-1000	1000-3000	Squareness ⊥	10-100	100-300	300-1000	1000-3000	Symmetry ⌯	10-100	100-300	300-1000	1000-3000	Circular Stroke ↗
Straightness — & Flatness ▱		0,1	0,2	0,4	0,6	0,8		0,4	0,6	0,8	1		0,6	0,8	1		0,2

NEN-ISO 2768-1m Linear dimensions	0,5-3	3-6	6-30	30-120	120-400	400-1000	1000-2000	2000-4000	(mm)	Broken edges	0,5-3	3-6	6-	(mm)	Corners	1-mm corner side
Nominal dims.	0,5-3	3-6	6-30	30-120	120-400	400-1000	1000-2000	2000-4000	(mm)		0,5-3	3-6	6-	(mm)		
Tolerance	±0,1	±0,1	±0,2	±0,3	±0,5	±0,8	±1,2	±2			±0,2	±0,5	±1			Tolerance
				±0'30	±0'20	±0'00	±0'00	±0'15					±1°			

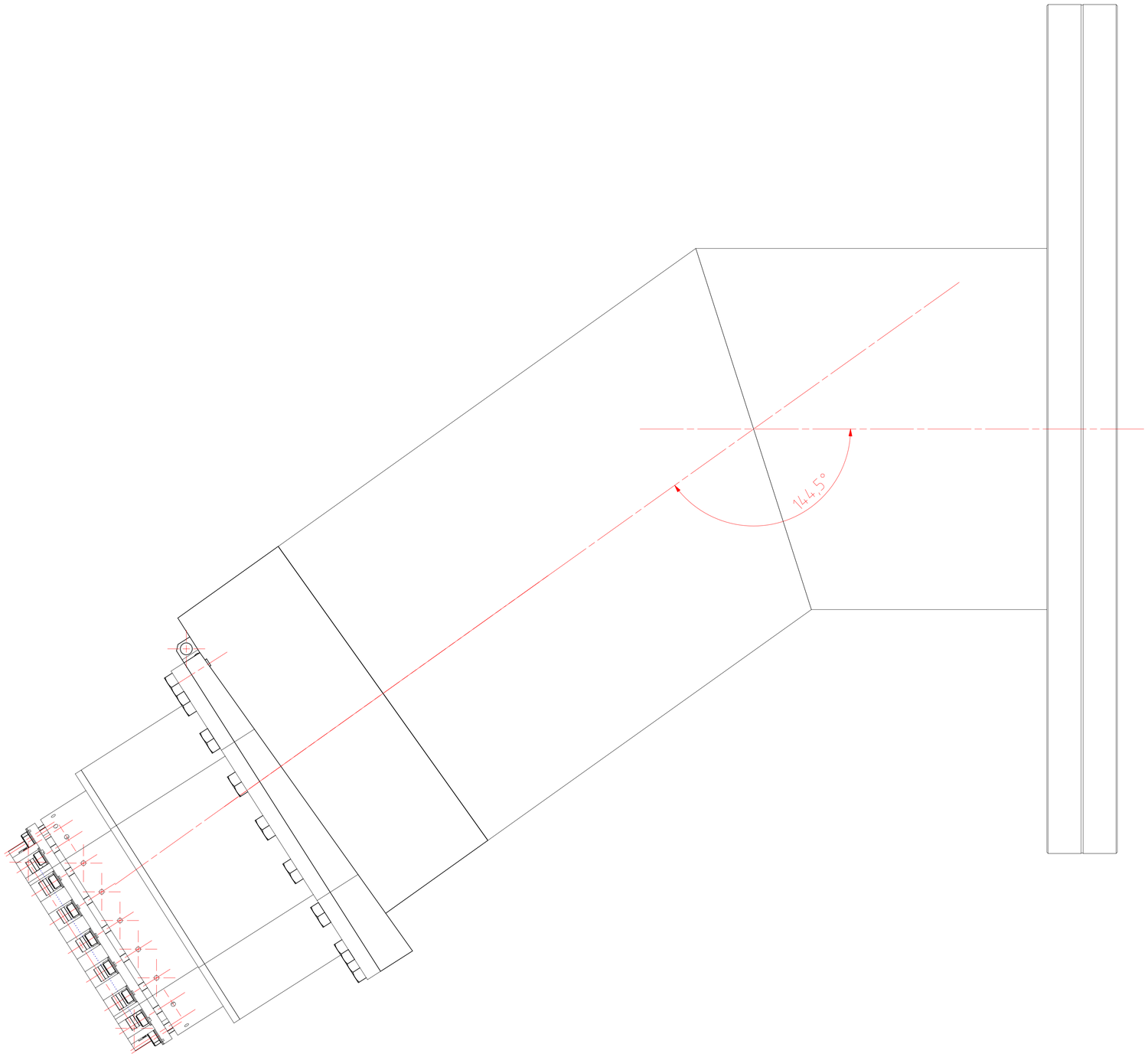

Nominal dims.	0,5–3	3–6	6–30	30–120	120–400	400–1000	1000–2000	2000–4000	[mm]	Broken edges	0,5–3	3–6	6–	[mm]	Corners	1–mm corner/side	0–10	10–50	50–120	120–400	400–
Tolerance	±0,1	±0,1	±0,2	±0,3	±0,5	±0,8	±1,2	±2	[mm]		±0,2	±0,5	±1	[mm]		Tolerance	±1°	±0°30'	±0°20'	±0°10'	±0°5'

NEN-ISO 2768-1m Linear dimensions

NEN ISO 2768-2K Geometrical tolerances	Nominal dims. mm	0,5–3	3–6	6–30	30–100	100–300	300–1000	1000–3000
Straightness & Flatness	Tolerance mm	0,05	0,1	0,2	0,4	0,6	0,8	
Squareness	f/m100	100–300	300–1000	1000–3000	Symmetry	f/m100	100–300	300–1000	1000–3000	Circular Stroke
		0,4	0,6	0,8	1		0,6	0,8	1	0,2

Shape- and dest.tol. acc. NEN-ISO 1101

Dim. tol. acc. NEN-ISO 406

General Tolerances NEN-ISO 2768-1m – 2768-2K

Roughness acc. NPR 3634

mm

Scale 1:1

	Date	Name
Drawn	–	H.A.J.Smit
Checked	–	H.A.J.Smit

Project: –

Group: –

Name: –

A1

Sheet 1/1

Drawing number:

3;1003;3000_dwg

Projectcode –
Werkorder –
Dimensions –
Material –
Mass [kg] –

Revision | Date

Kernfysisch Versneller Instituut
Zernikelaan 25 9747AA Groningen
+31 (0)50 363 3549 / www.kvi.nl

Ready for production May 23rd 2012

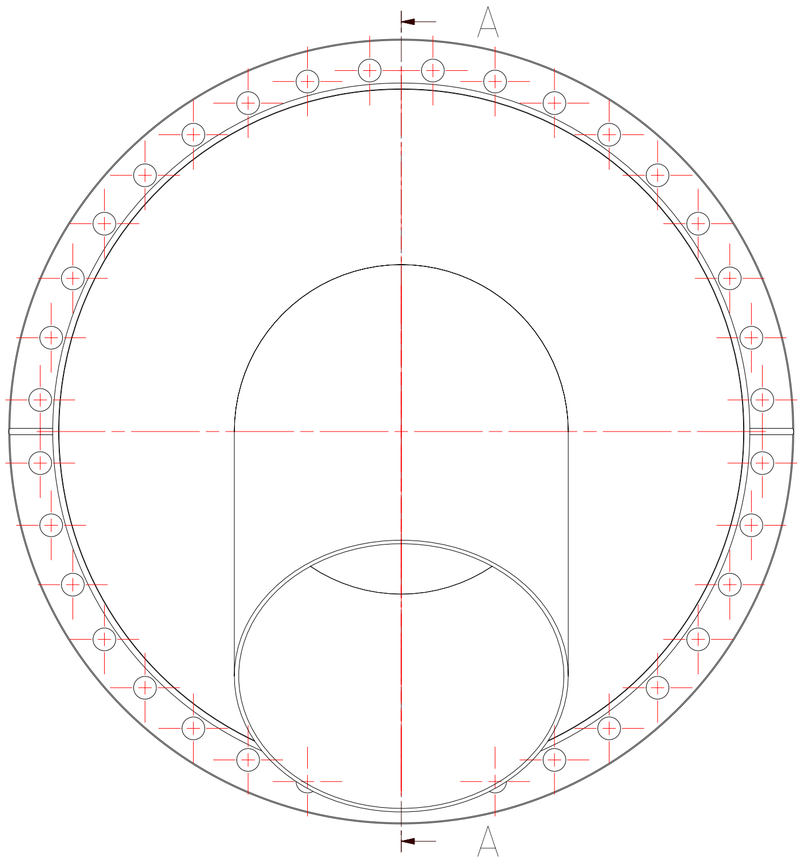

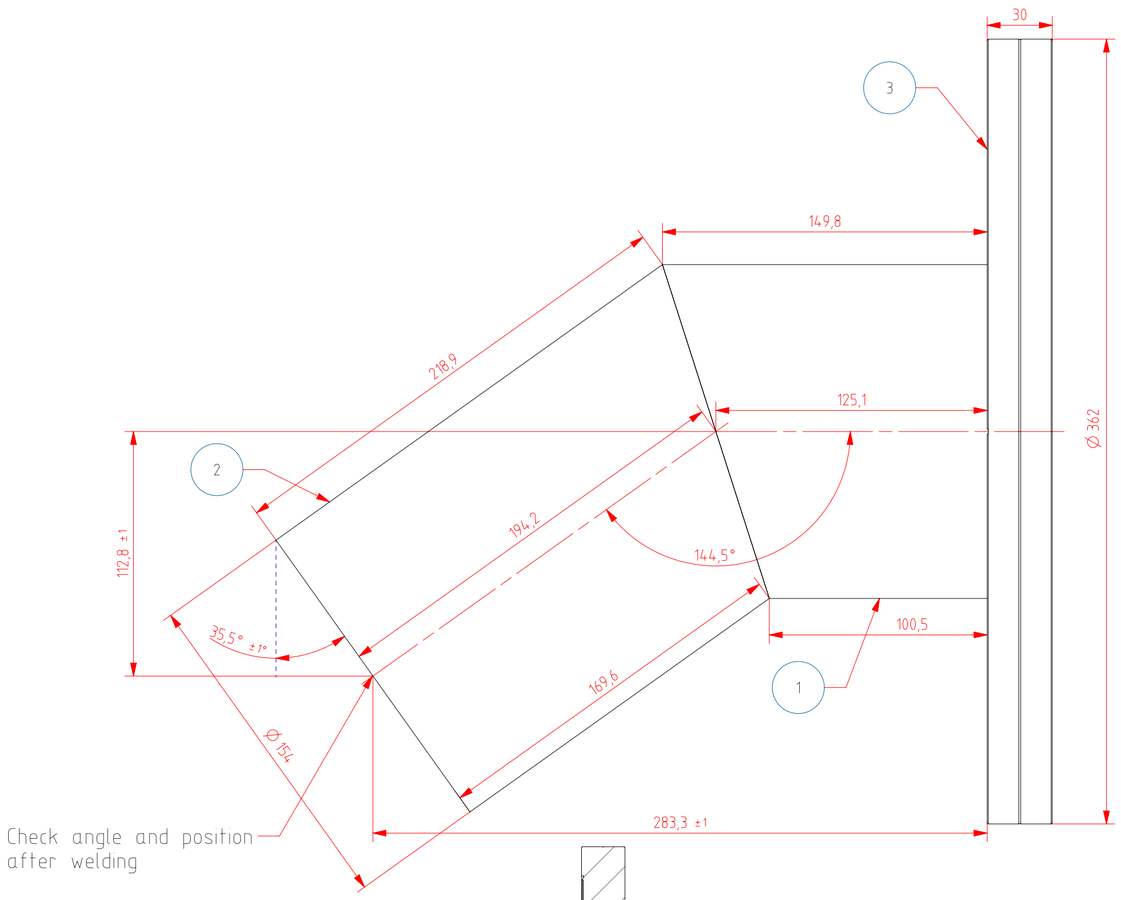

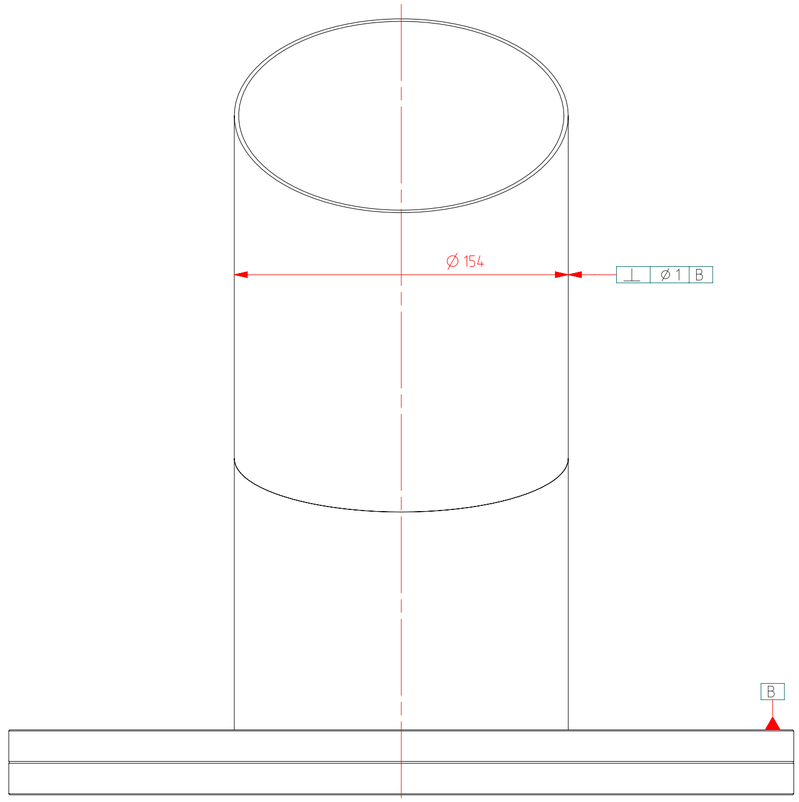

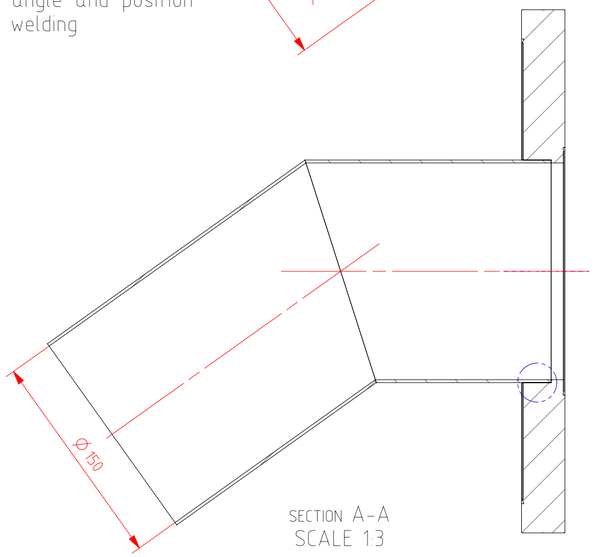

SECTION A-A
SCALE 1:3

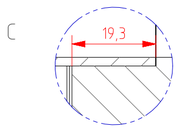

DETAIL C
SCALE 1:1

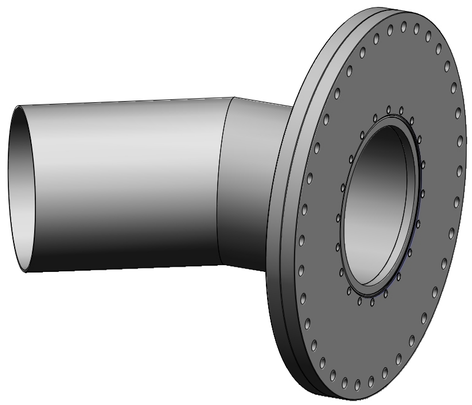

Pos.	No.	QTY	Filename	Name	Material	Remarks
3		1	3,1003,3310-03,CF300-150	CF-DN300_150 reducer	AISI_316L(1.4404)	
2		1	3,1003,3310-02,TUBE 154MM	CF160 Tube piece	AISI_316L(1.4404)	-
1		1	3,1003,3310-01,TUBE 154MM	CF160 Tube piece	AISI_316L(1.4404)	-

Shape- and dest.tol. acc. NEN-ISO 1101
Dim. tol. acc. NEN-ISO 406
General Tolerances NEN-ISO 2768-1m / 2768-2K
Roughness acc. NPR 3634
mm

	Date	Name
Drawn	15-05-2012	M.Lindemulder
Checked	-	-

Revision | Date

Projectcode: 623001
Werkorder: G1003
Dimensions: LxBxH
Material: AISI316L
Mass (kg): abt. 21 kg

Kernfysisch Versneller Instituut
Zernikelaan 25 9747AA Groningen
+31 (0)50 363 3549 / www.kvi.nl

Project: EXL Proto
Group: GSI NUSTAR
Name: Back part Unit B
Drawing number: 3,1003,3310_dwg
Scale 1:2
A2
Sheet 1/1

NEN ISO 2768-2K Geometrical tolerances	Nominal dims. mm / Tolerance mm	Straightness & Flatness	t/m10	10-30	30-100	100-300	300-1000	1000-3000	Squareness ⊥	t/m100	100-300	300-1000	1000-3000	Symmetry ⌯	t/m100	100-300	300-1000	1000-3000	Circular Stroke ↗
			0,05	0,1	0,2	0,4	0,6	0,8		0,4	0,6	0,8	1		0,6	0,8	1		0,2

NEN-ISO 2768-1m Lineair dimensions	0,5-3	3-6	6-30	30-120	120-400	400-1000	1000-2000	2000-4000	[mm]	Broken edges	0,5-3	3-6	6-	[mm]	Corners	1-min. cornerside tolerance	0-10	10-50	50-120	120-400	400-
Nominal dims. Tolerance	±0,1	±0,1	±0,2	±0,3	±0,5	±0,8	±1,2	±2	[mm]		±0,2	±0,5	±1	[mm]			±1°	±0°30'	±0°20'	±0°10'	±0°5'

T:\3 GSI\3,1003,EXL Prototype\

Ready for production May 23rd 2012

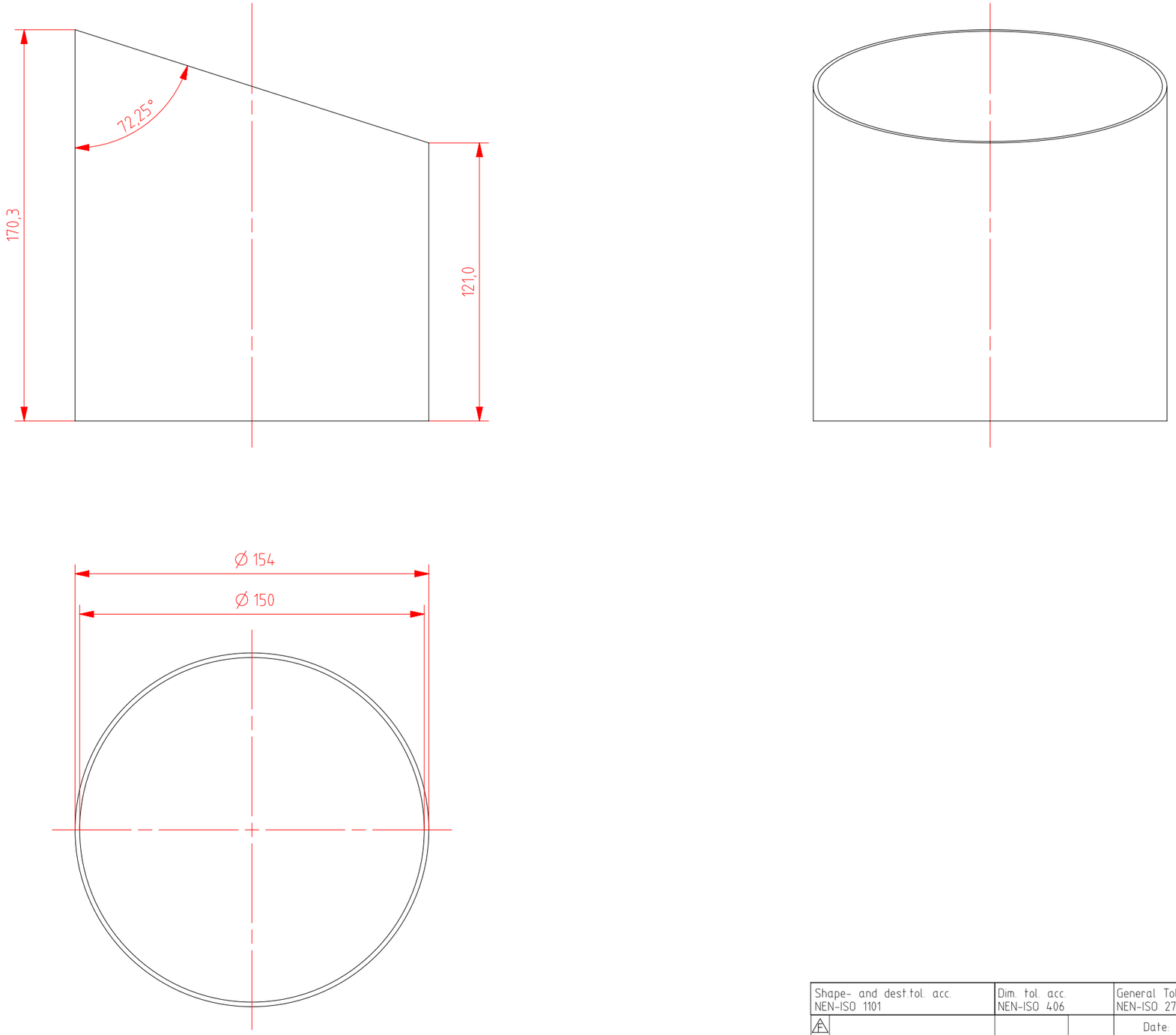

Shape- and dest.tol. acc. NEN-ISO 1101	Dim. tol. acc. NEN-ISO 406		General Tolerances NEN-ISO 2768-1m / 2768-2K		Roughness acc. NPR 3634	mm	Scale
			Date:	Name:	Project: EXL Proto		1:2
		Drawn	05-2012	M.Lindemulder	Group: GSI NUSTAR		A3
		Checked	–	–	Name: CF160 Tube piece		
Revision	Date				Drawing number: 3;1003;3310-01_dwg		Sheet 1/1

Projectcode: 623001
Werkorder: G1003
Dimensions: –
Material: AISI_316L(1.4404)
Mass [kg]: 1,1

Kernfysisch Versneller Instituut
Zernikelaan 25 9747AA Groningen
+31 (0)50 363 3549 / www.kvi.nl

NEN ISO 2768-2K Geometrical tolerances	Nominal dims. mm / Tolerance mm	t/m10	10-30	30-100	100-300	300-1000	1000-3000
Straightness & Flatness		0,05	0,1	0,2	0,4	0,6	0,8

Squareness	t/m100	100-300	300-1000	1000-3000
⊥	0,4	0,6	0,8	1

Symmetry	t/m100	100-300	300-1000	1000-3000
⌯	0,6	0,8	1	

Circular Stroke	
↗	0,2

NEN-ISO 2768-1m Linear dimensions Tolerance	0,5-3	3-6	6-30	30-120	120-400	400-1000	1000-2000	2000-4000	[mm]
Nominal dims.	±0,1	±0,1	±0,2	±0,3	±0,5	±0,8	±1,2	±2	[mm]

Broken edges	0,5-3	3-6	6-	[mm]
	±0,2	±0,5	±1	[mm]

Corners	1-min. cornerside tolerance	0-10	10-50	50-120	120-400	400-
		±1°	±0°30'	±0°20'	±0°10'	±0°5'

T:\3 GSI\3,1003,EXL Prototype\

Ready for production May 23rd 2012

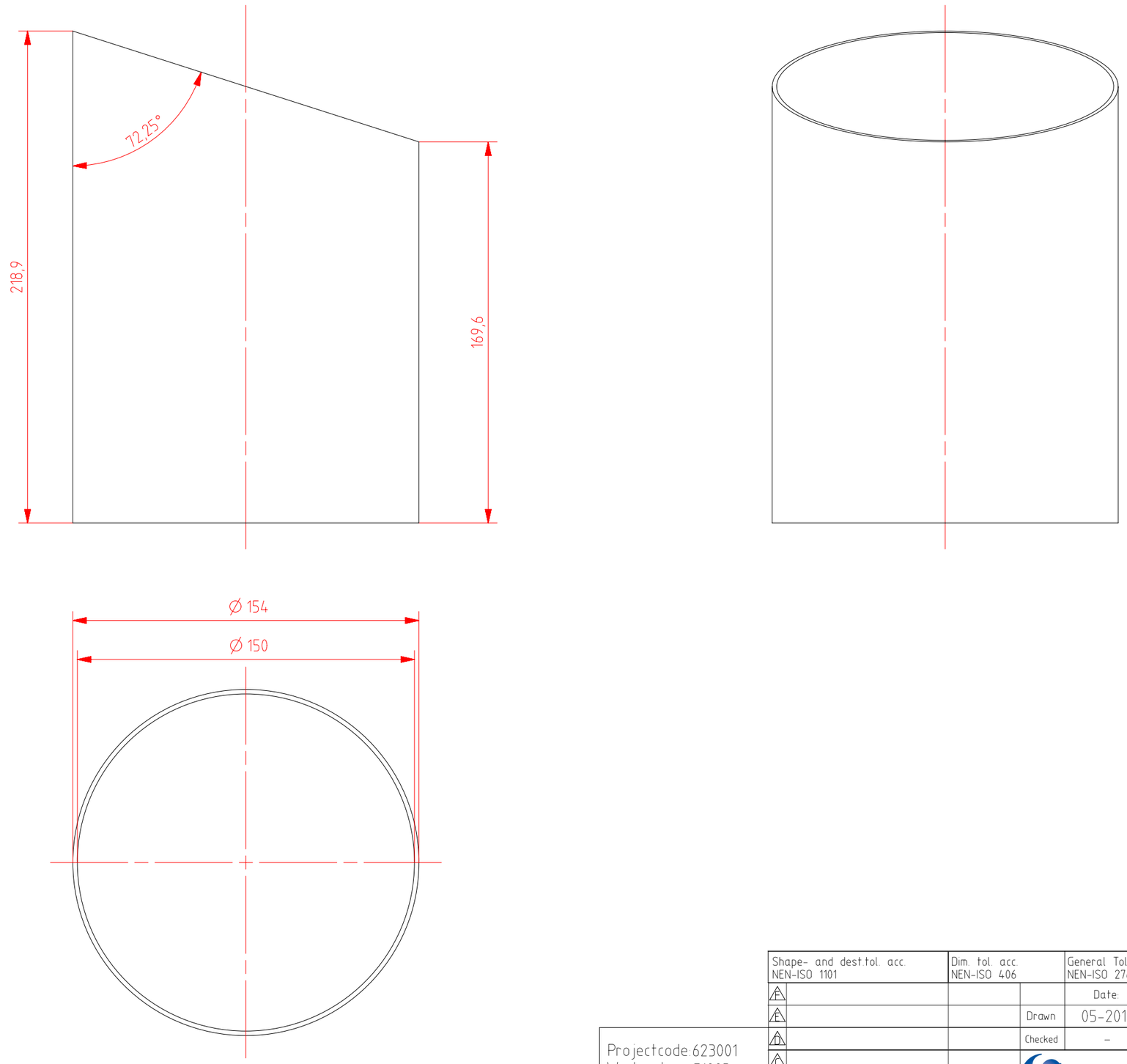

Projectcode:623001
Werkorder: G1003
Dimensions:
Material: AISI_316L(1.4404)
Mass [kg]: 1,5

Shape- and dest.tol. acc. NEN-ISO 1101	Dim. tol. acc. NEN-ISO 406	General Tolerances NEN-ISO 2768-1m / 2768-2K		Roughness acc. NPR 3634	mm	Scale
		Date:	Name:	Project: EXL Proto		1:2
	Drawn	05-2012	M.Lindemulder	Group: GSI NUSTAR		A3
	Checked	–	–	Name: CF160 Tube piece		
Revision	Date			Drawing number: 3;1003;3310-02_dwg		Sheet 1/1

Kernfysisch Versneller Instituut
Zernikelaan 25 9747AA Groningen
+31 (0)50 363 3549 / www.kvi.nl

NEN ISO 2768-2K Geometrical tolerances	Nominal dims. mm	Straightness & Flatness	t/m10	10-30	30-100	100-300	300-1000	1000-3000	Squareness	t/m100	100-300	300-1000	1000-3000	Symmetry	t/m100	100-300	300-1000	1000-3000	Circular Stroke	
	Tolerance mm		0,05	0,1	0,2	0,4	0,6	0,8	⊥	0,4	0,6	0,8	1	⌯	0,6	0,8	1	↗	0,2	

NEN-ISO 2768-1m Linear dimensions	0,5-3	3-6	6-30	30-120	120-400	400-1000	1000-2000	2000-4000	[mm]	Broken edges	0,5-3	3-6	6-	[mm]	Corners	1-min cornerside tolerance	0-10	10-50	50-120	120-400	400-
Nominal dims.	± 0,1	± 0,1	± 0,2	± 0,3	± 0,5	± 0,8	± 1,2	± 2	[mm]		± 0,2	± 0,5	± 1	[mm]			± 1°	± 0°30'	± 0°20'	± 0°10'	± 0°5'

T:\3 GSI\3,1003,EXL Prototype\

Released for production 07-06-2012

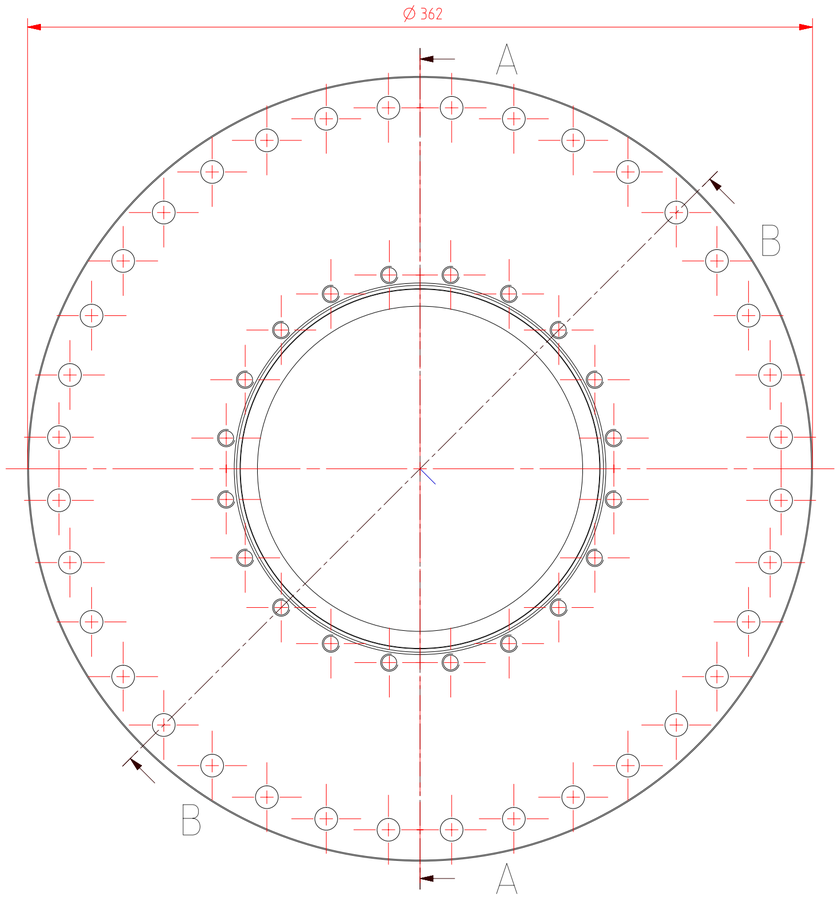

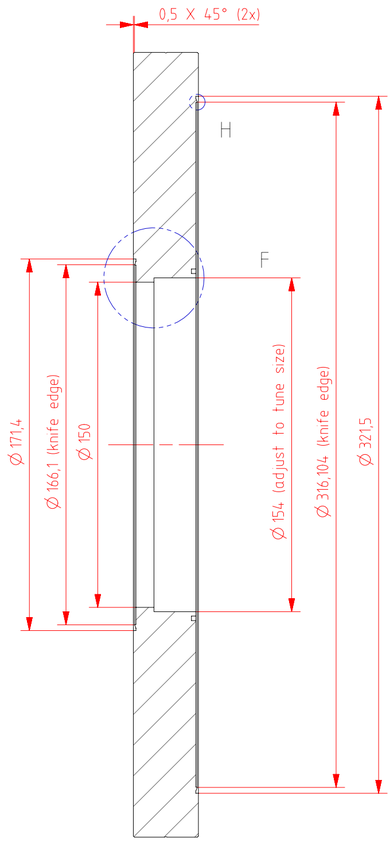

SECTION A-A

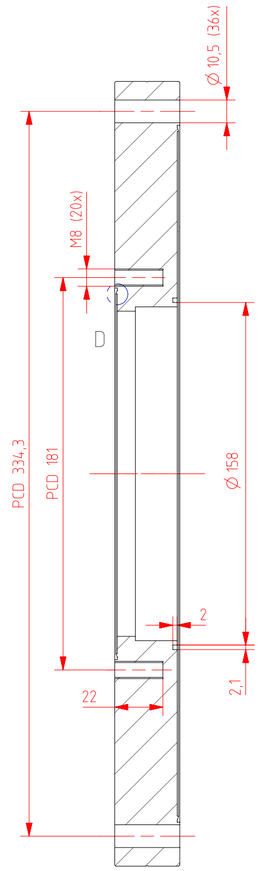

SECTION B-B

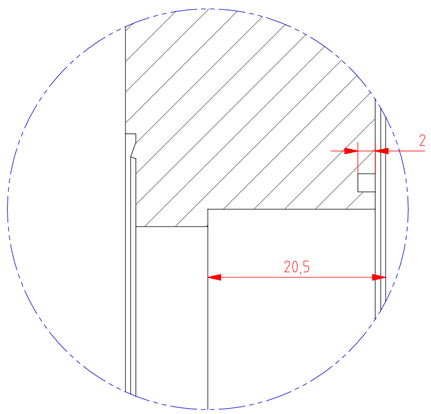

DETAIL F
SCALE 2:1

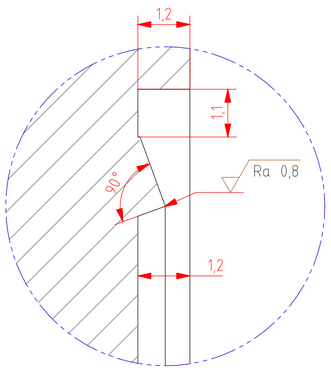

DETAIL H
SCALE 10:1

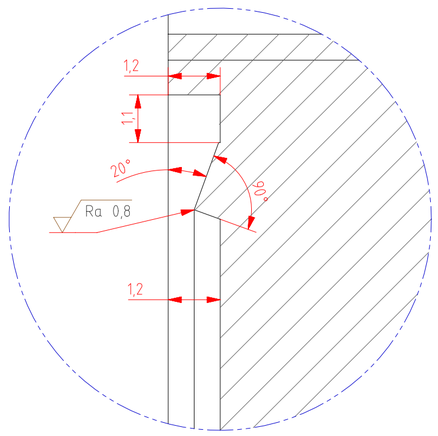

DETAIL D
SCALE 10:1

Ra 1,6 (Ra 0,8)

Projectcode 623001
Werkorder: G1003
Dimensions: 368x28
Material: AISI_316L(1.4404)
Mass (kg): 18,5

Shape- and dest tol. acc. NEN-ISO 1101	Dim. tol. acc. NEN-ISO 406	General Tolerances NEN-ISO 2768-1m / 2768-2K		Roughness acc. NPR 3634	mm
			Date:	Name:	
		Drawn	05-2012	M.Lindemulder	
		Checked	–	–	
Revision	Date				

Kernfysisch Versneller Instituut
Zernikelaan 25 9747AA Groningen
+31 (0)50 363 3549 / www.kvi.nl

Project: EXL proto
Group: Nustar
Name: CF-DN300_150 reducer
Drawing number: 3;1003;3310-03_dwg
Scale 1:2
A2
Sheet 1/1

NEN ISO 2768-2K Geometrical tolerances	Nominal dims mm	Straightness & Flatness	t/m10	10-30	30-100	100-300	300-1000	1000-3000	Squareness	t/m100	100-300	300-1000	1000-3000	Symmetry	t/m100	100-300	300-1000	1000-3000	Circular Stroke
	Tolerance mm		0,05	0,1	0,2	0,4	0,6	0,8	⊥	0,4	0,6	0,8	1	⌯	0,6	0,8	1	↗	0,2

NEN-ISO 2768-1m Lineair dimensions	0,5-3	3-6	6-30	30-120	120-400	400-1000	1000-2000	2000-4000	[mm]	Broken edges	0,5-3	3-6	6-	[mm]	Corners	1-min cornerside	0-10	10-50	50-120	120-400	400-
Nominal dims Tolerance	±0,1	±0,1	±0,2	±0,3	±0,5	±0,8	±1,2	±2	[mm]		±0,2	±0,5	±1	[mm]		tolerance	±1°	±0°30'	±0°20'	±0°10'	±0°5'

T:\3 GSI\3,1003,EXL Prototype\Subass-Mono\3000