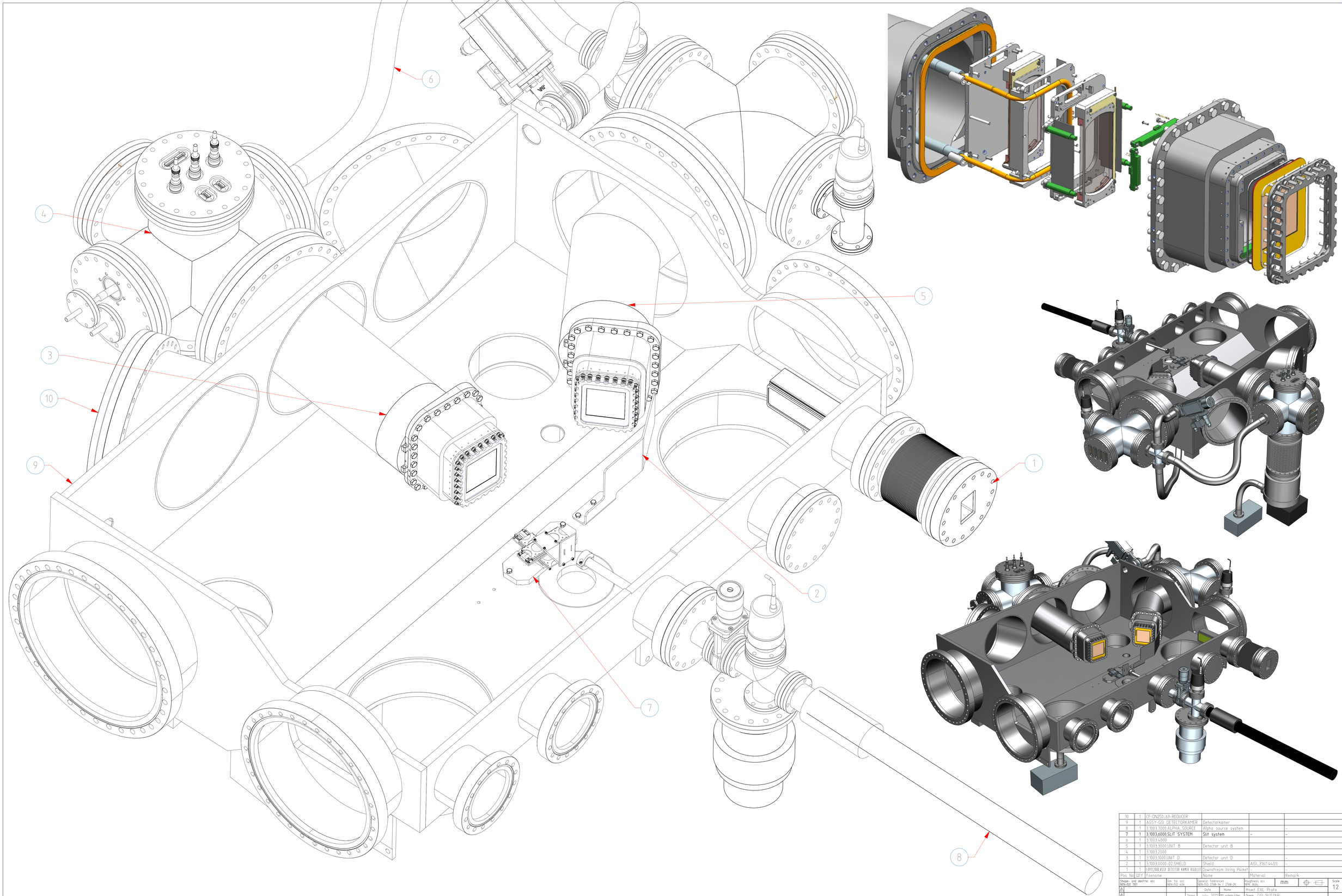

Pos. No.	QTY	Filename	Name	Material	Remark
10	1	CF-DN250_63-REDUCER			
9	1	ASSY-GSI DETECTORKAMER	Detectorkamer		
8	1	3,1003,7000,ALPHA_SOURCE	Alpha source system		-
7	1	3,1003,6000,SLIT SYSTEM	Slit system	-	-
6	1	3,1003,4000			
5	1	3,1003,3000,UNIT B	Detector unit B		-
4	1	3,1003,2000			
3	1	3,1003,1000,UNIT D	Detector unit D		-
2	1	3,1003,0000-02,SHIELD	Shield	AISI_316(1.4401)	-
1	1	3,8911,2000,ASSY DETECTOR KAMER RIGOLLET	Downstream Inning Pocket	-	-

Shape- and dest.fol. acc. NEN-ISO 1101	Dim. fol. acc. NEN-ISO 406	General Tolerances NEN-ISO 2768-1m / 2768-2K	Roughness acc. NPR 3634	mm	Scale 1:2
		Date: july 2012	Name: M.Lindemulder	Project: EXL Proto	
		Drawn		Group: GSI NUSTAR	
		Checked	-	Name: N2 N4 EXL prototype	A0
Revision	Date	Kenfgalech Verwaller Instituut Zernikelaan 25 9747AA Groningen +31 (0)50 363 3549 / www.kvi.nl		Drawing number: 1,1003,0000_dwg	Sheet 1/1

Projectcode 623001
Werkorder: G1003
Dimensions: 1850x2300x550
Material: ⌀
Mass (kg): kg

NEN-ISO 2768-1m Linear dimensions	Nominal dims. mm	Tolerance mm	Straightness & Flatness	t.m.10	10-30	30-100	100-300	300-1000	1000-3000	Squareness	t.m.100	100-300	300-1000	1000-3000	Symmetry	t.m.100	100-300	300-1000	1000-3000	Circular Strike	
				0.05	0.1	0.2	0.4	0.6	0.8	⊥	0.4	0.6	0.8	1	⌯	0.6	0.8	1	↗	0.2

NEN-ISO 2768-1m Linear dimensions	Nominal dims.	Tolerance	0.5-3	3-6	6-30	30-120	120-400	400-1000	1000-2000	2000-4000	Broken edges	0.5-3	3-6	6-	Corners	1-min. cornerside tolerance	0-10	10-50	50-120	120-400	400-
			±0,1	±0,1	±0,2	±0,3	±0,5	±0,8	±1,2	±2	mm	±0,2	±0,5	±1	mm		±1°	±0°30'	±0°20'	±0°10'	±0°5'