FEE integration via GTB and MBS for R³B

Reactions with Relativistic Radioactive Beams

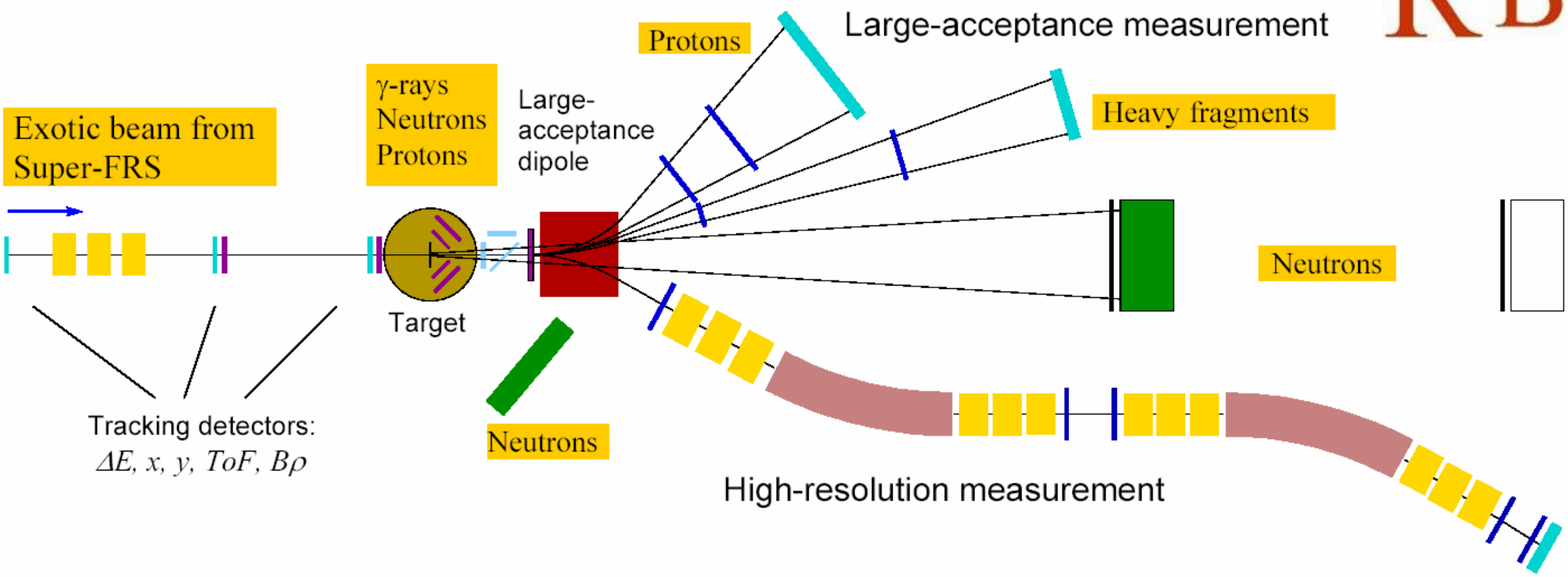

Extended experimental Setup at Cave C

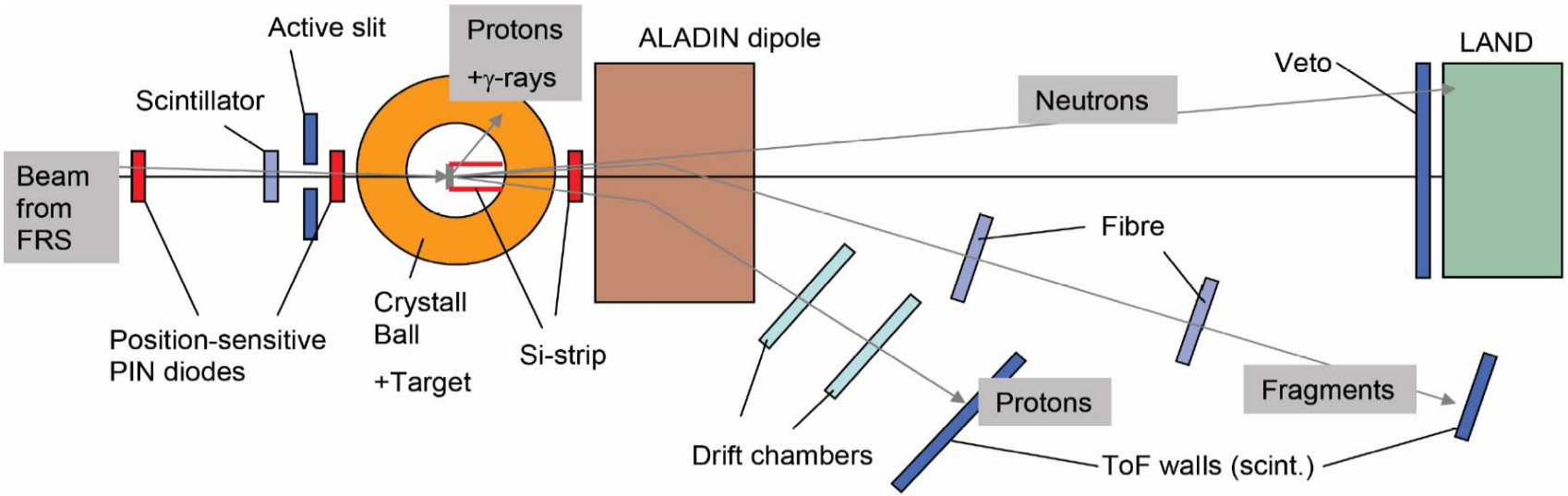

For 2007:
proton tracking around the target with Si-strip detectors

For 2007:
proton tracking behind magnet with drift chambers (100×80 cm^2)
resolution ~200 μm

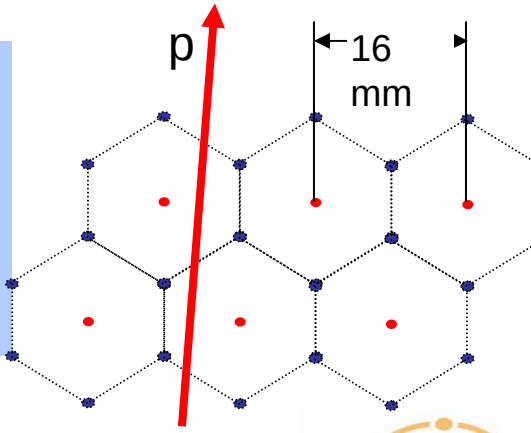

Vertex reconstruction for ions and protons

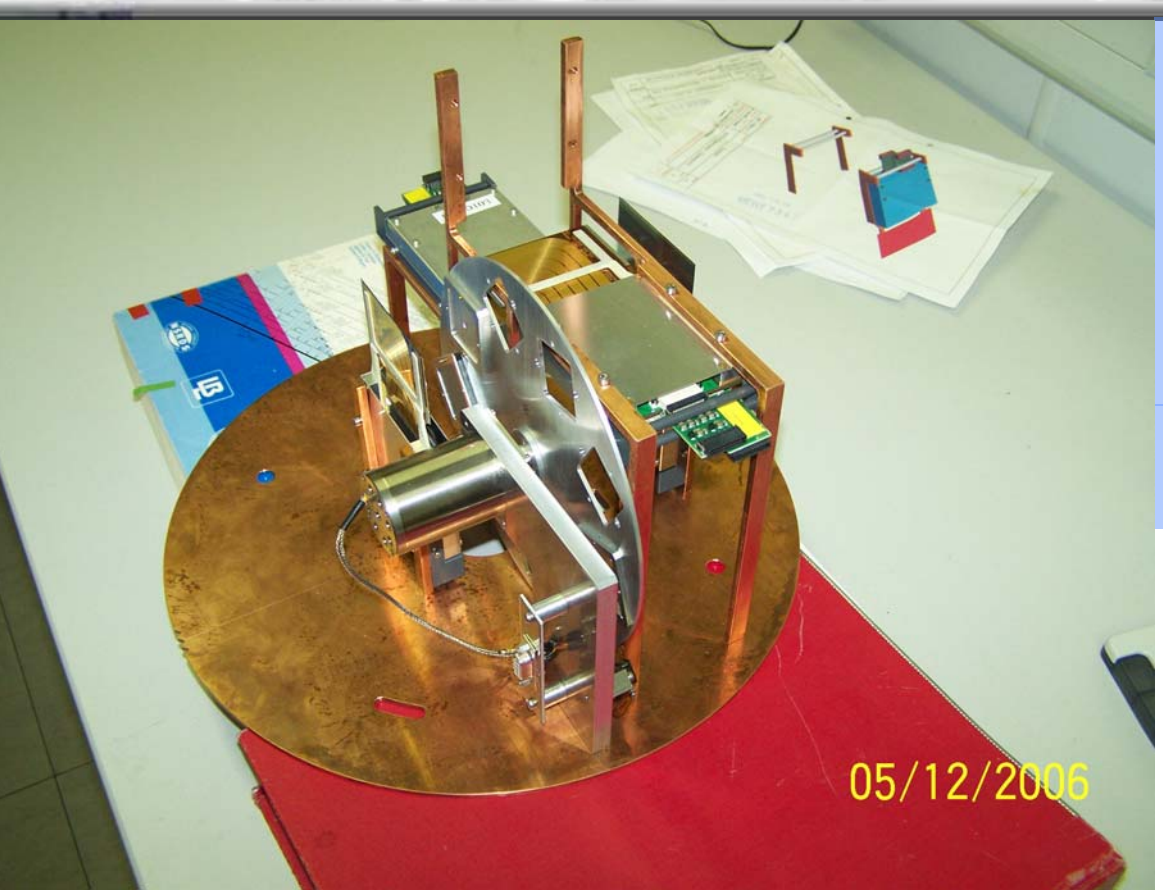

Front of the SSD

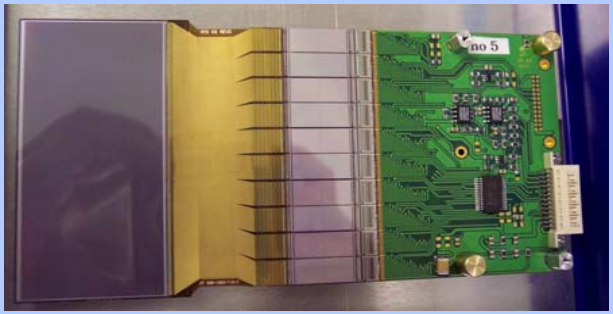

41 × 72 mm^2 , strip pitch about 100µm

Dynamic range – 100 keV - 14 MeV

FEE

AMS(-02) readout:

e.g. NIM A 439 (2000) 53

6+10 read out 2*5(320) + 6(384)

VA_hdr.AMS64 resp. 9a chips

IDEAS/Norway

→ SIDEREM NIM module

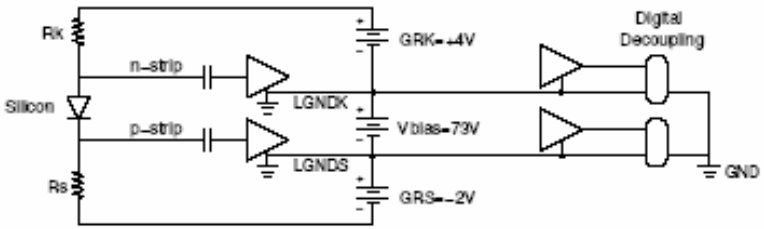

SIlicon Strip DEtector REadout Module (SIDEREM)

J. Hofmann, W. Ott, N.Kurz (GSI)

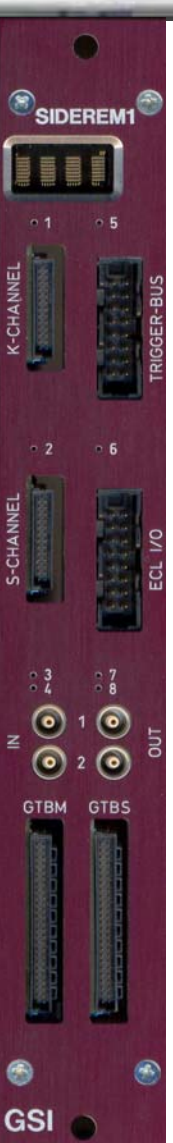

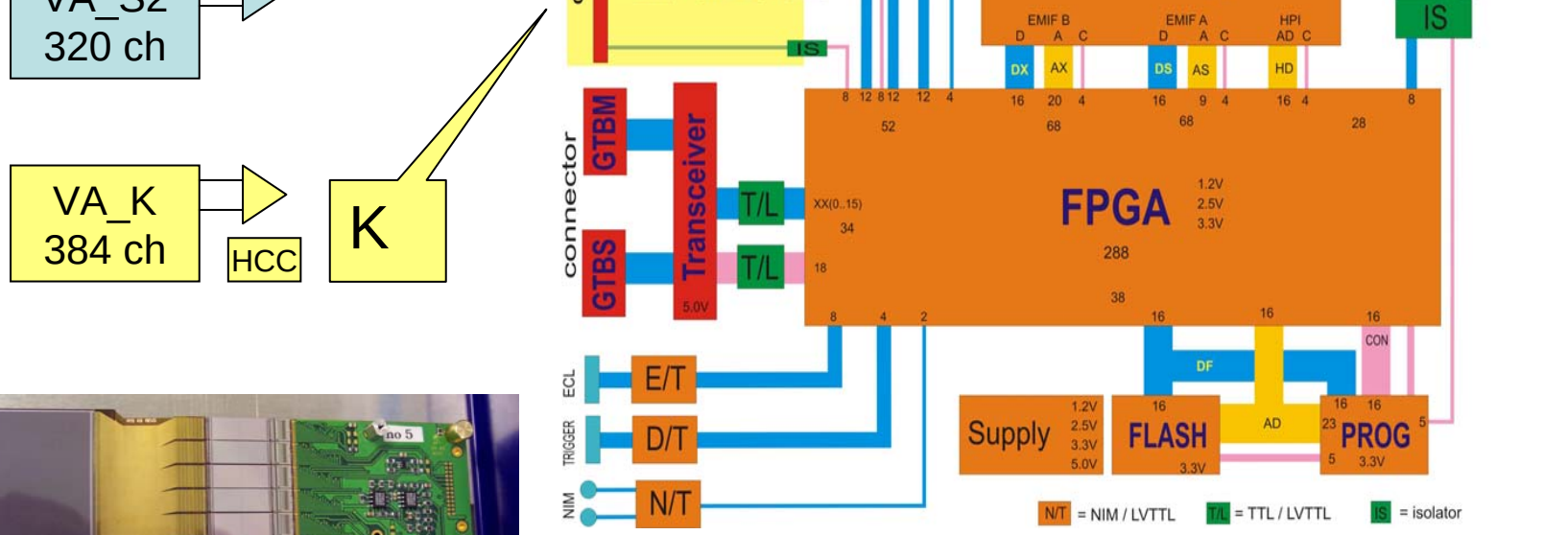

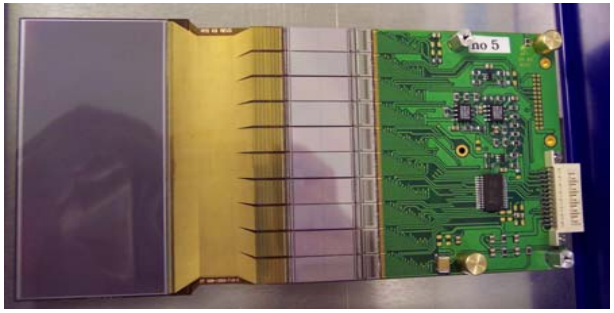

12 Bit ADC	ca. 80 µs readout time (5MHz)
DSP	TMS320VC6414 (TI)
FPGA	Virtex-4 LX25 (Xilinx)

SIDEREM system

J. Hofmann, W. Ott, N.Kurz (GSI)

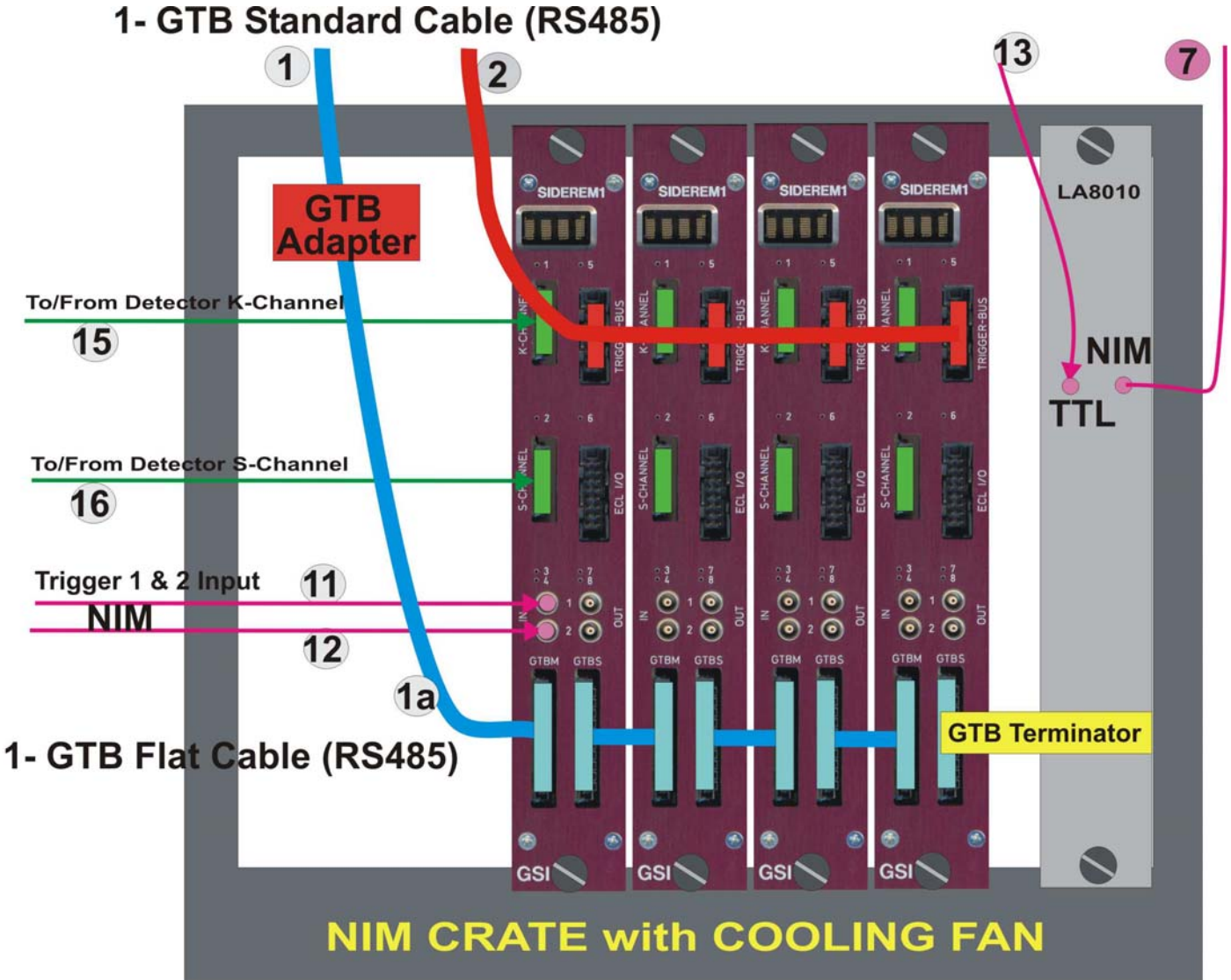

Proton Driftchamber FEE

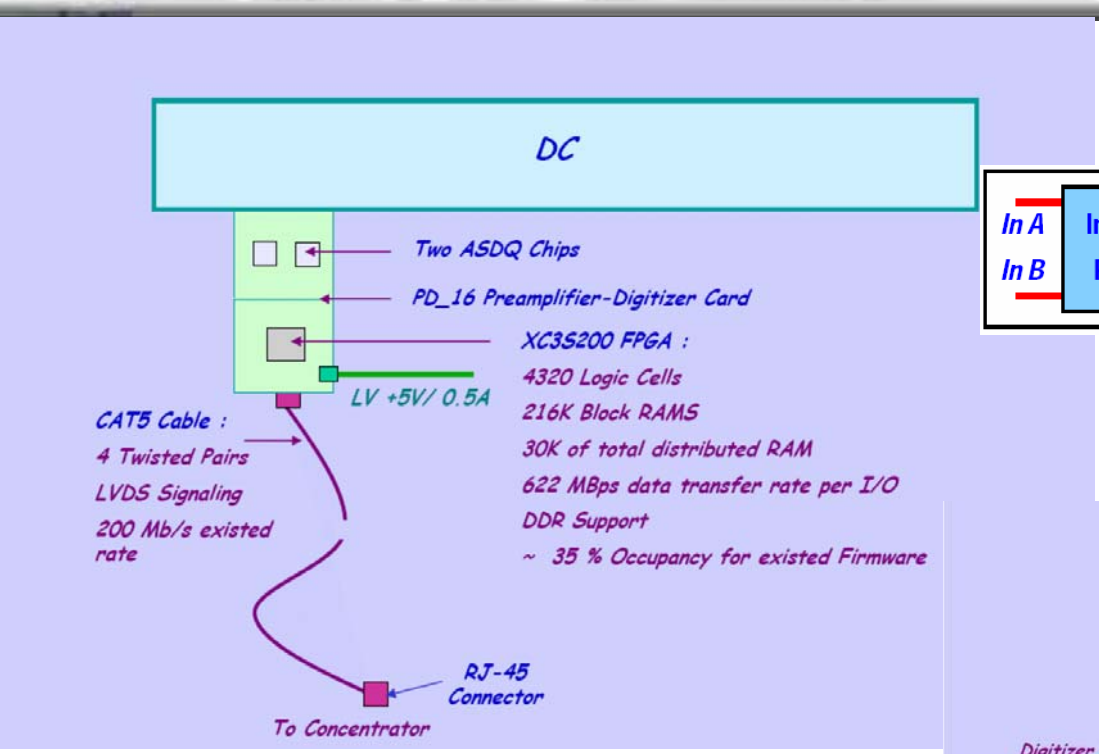

PNPI St Peterburg

Fermilab

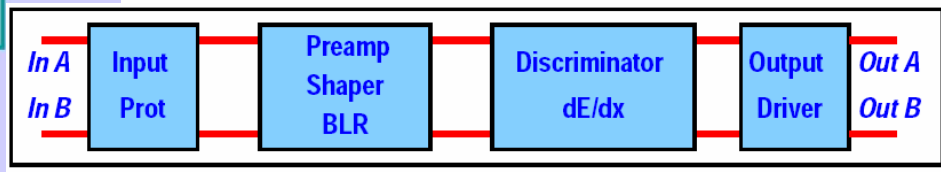

ASDQ block diagramme

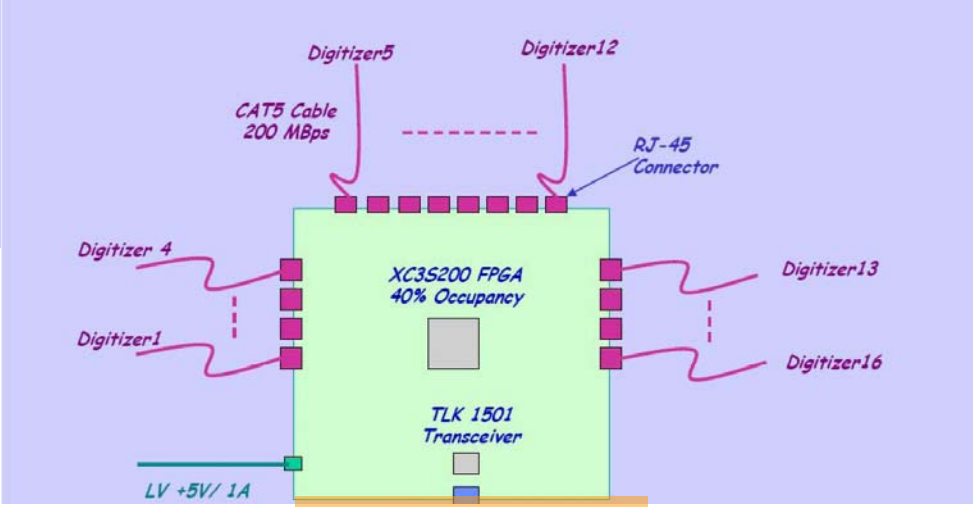

PNPI

GTB Bus Piggy back

System integration via GTB piggy back

L. Uvarov, V. Golovtsov, V. Yatsura, A. Kandzadeev (PNPI)
Ch. Wimmer, Ch. Müntz, J. Stroth (UNI Frankfurt)
J. Hofmann, W. Ott, N.Kurz (GSI)

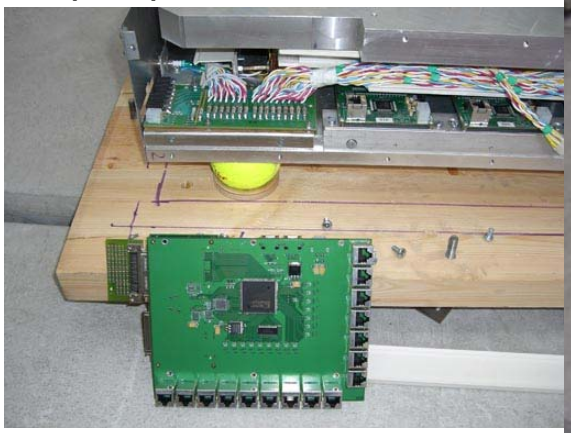

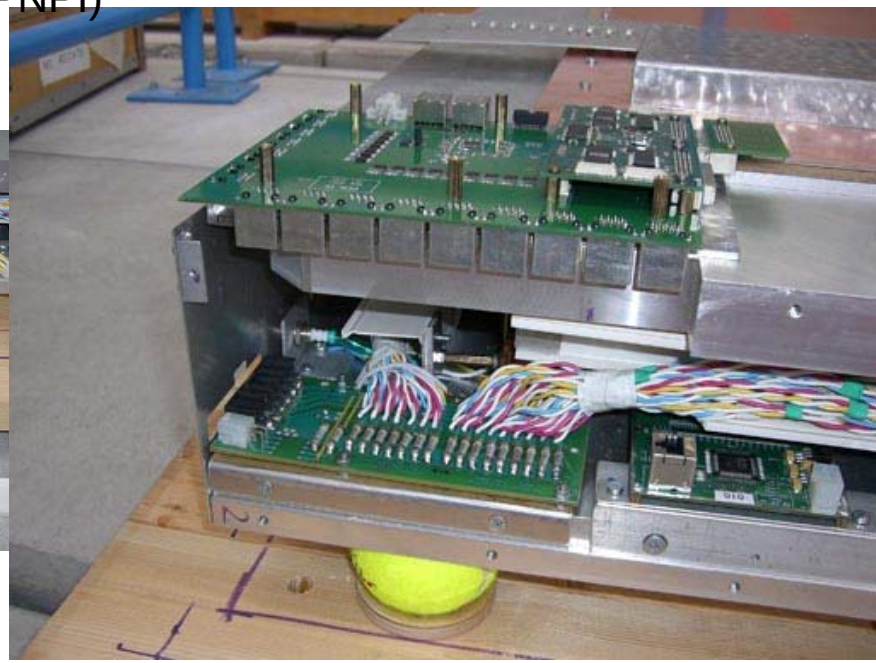

GTB features:

- Cable connections over distances up to 100m.
- Screened 50 wires cable, 50 pin Mini-Ribbon connectors.
- Single master, up to 15 slaves for GTB32 configuration.
- Data rates up to 25 Mbytes/s.
- Differential transfer, address and data are multiplexed.
- 16 or 32 bit address and data width.
- Access to slaves via Token or direct Addressing

SAM/GTB readout setup

J. Hofmann, W. Ott, N.Kurz (GSI)

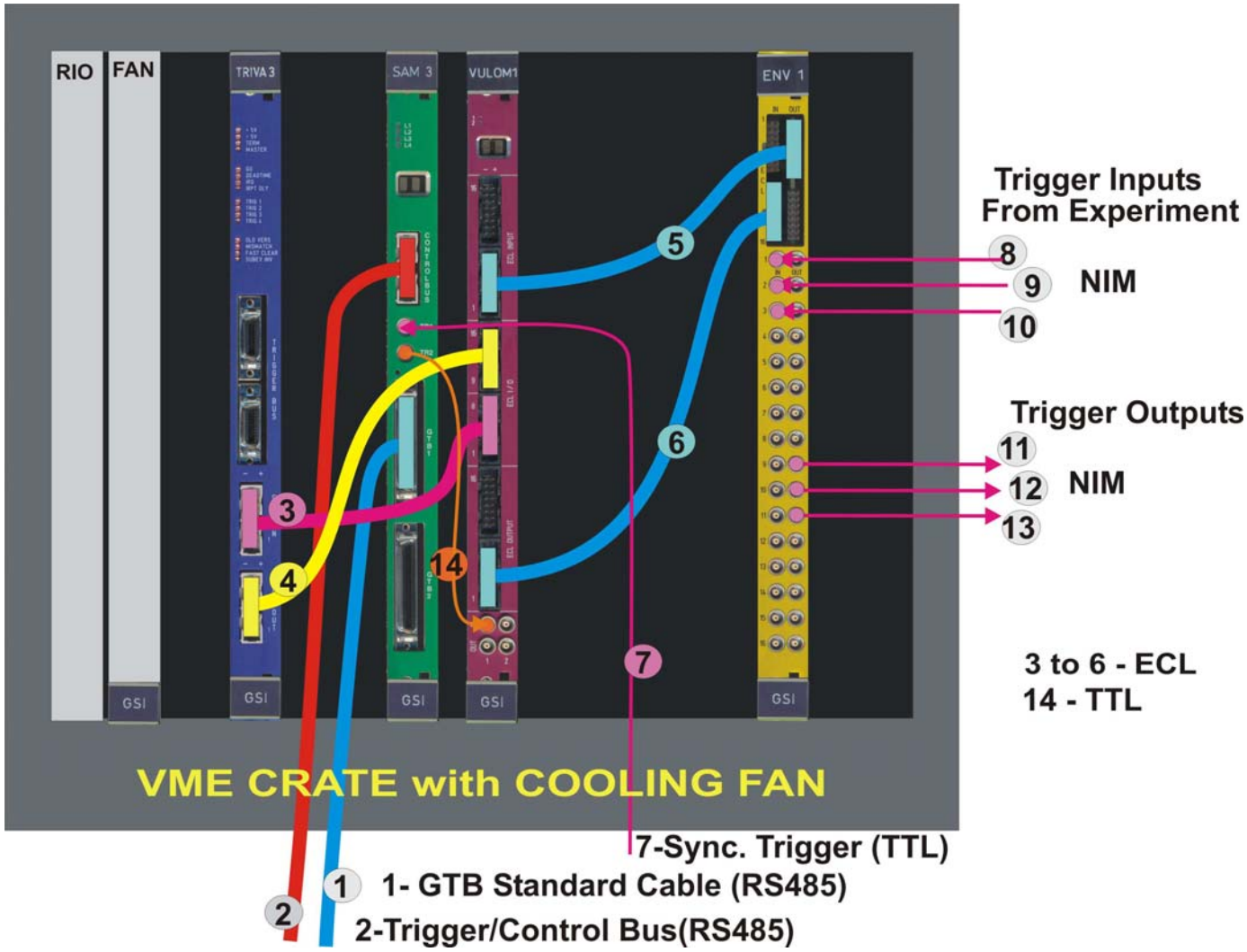

DCH Timing diagramme

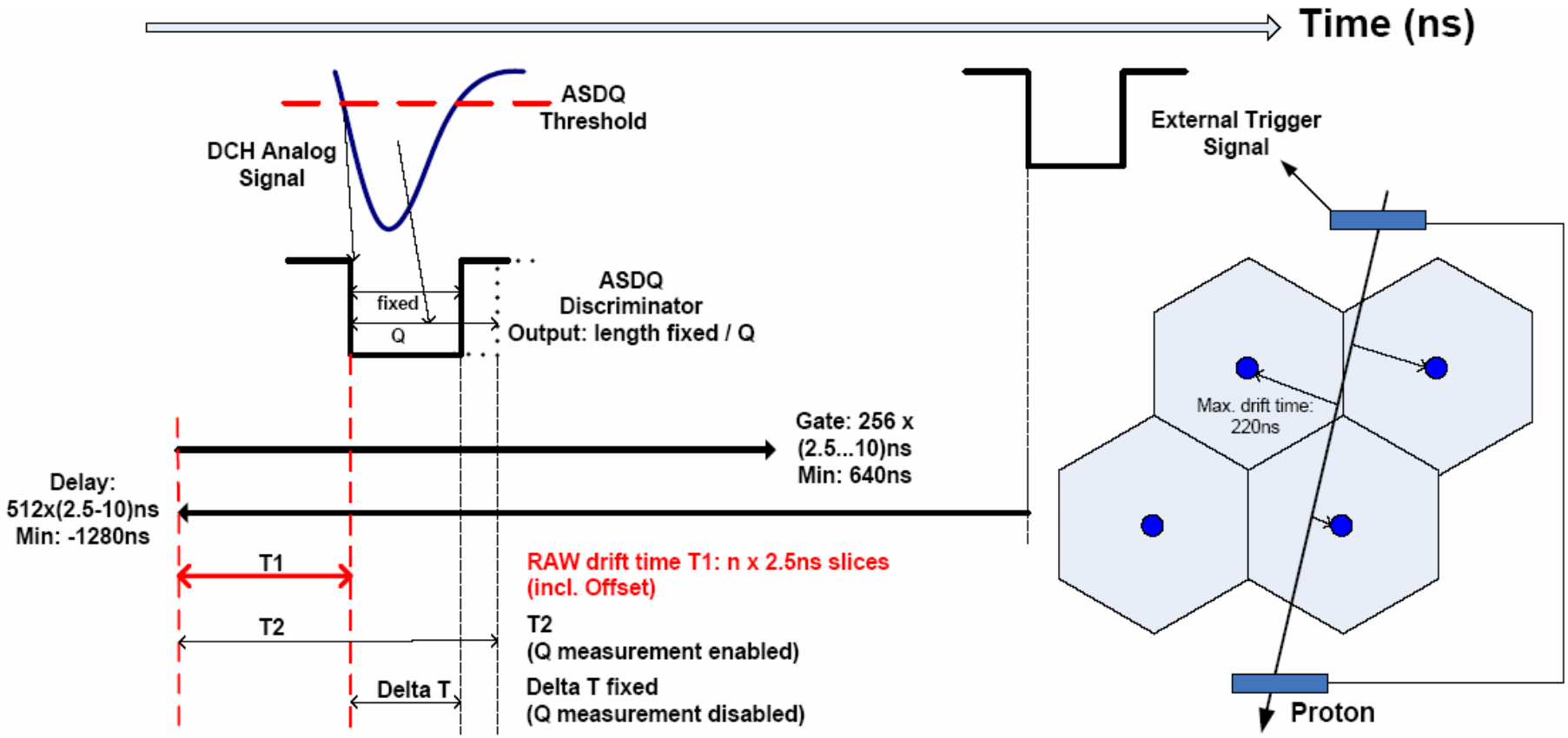
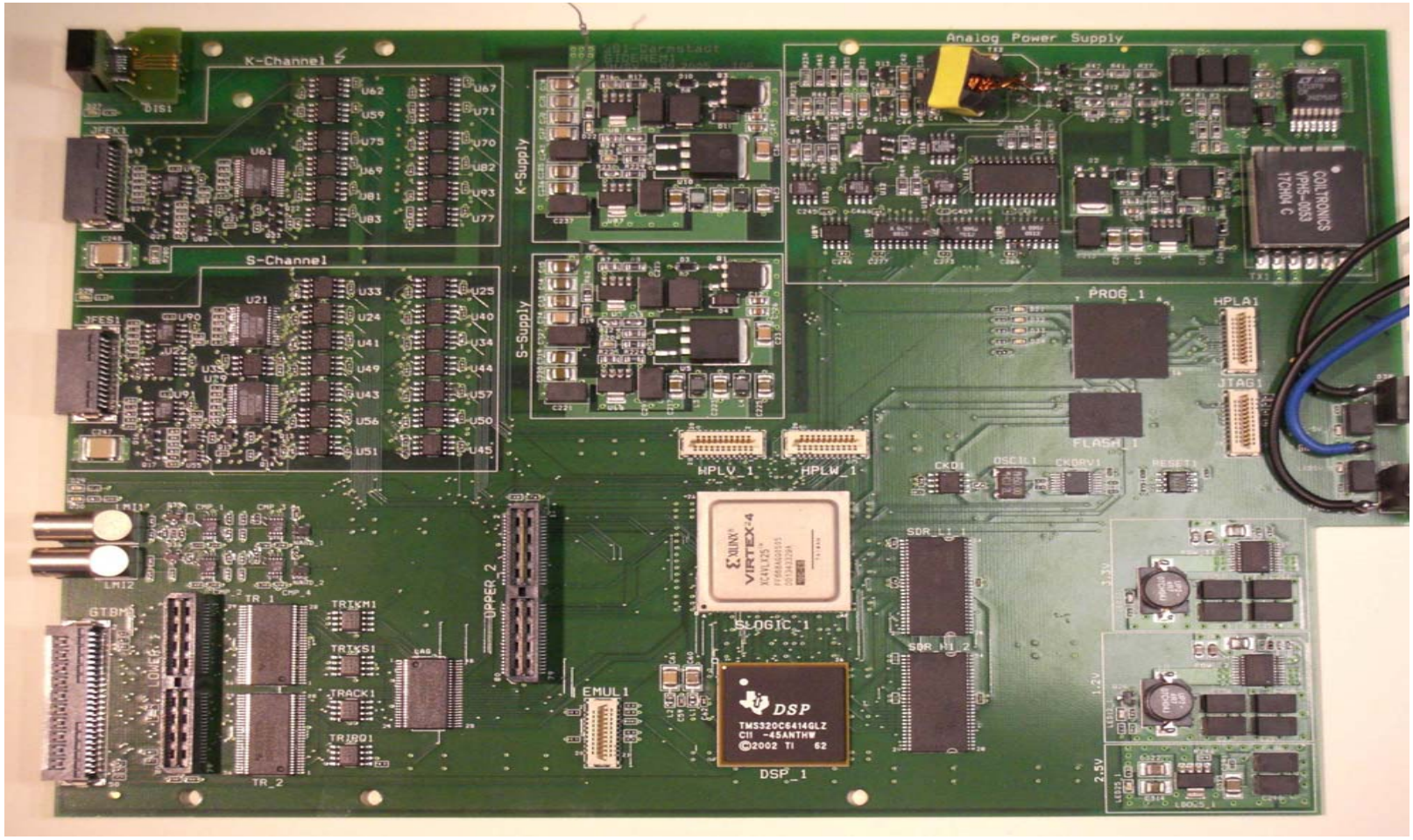
Siderem board