The EXL experiment: Programme …

Spokesperson: M. Chartier

GSI Liaison: P. Egelhof

- elastic scattering (p,p), (α,α), …
  nuclear matter distribution ρ(r), skins, halo structures
- inelastic scattering (p,p'), (α,α'), …
  deformation parameters, B(E2) values, transition densities, giant resonances
- charge exchange reactions (p,n), (^{3}He,t), (d, ^{2}He), …
  Gamow-Teller strength
- transfer reactions (p,d), (p,t), (p, ^{3}He), (d,p), …
  single particle structure, spectroscopic factors
  spectroscopy beyond the driplines
  neutron pair correlations
  neutron (proton) capture cross sections
- knock-out reactions (p,2p), (p,pn), (p,p ^{4}He)…
  ground state configurations, nucleon momentum distributions, cluster correlations

Gas target → low luminosity → and low q physics …

- elastic scattering (p,p), (α,α), …
  nuclear matter distribution ρ(r), skins, halo structures
- inelastic scattering (p,p'), (α,α'), …
  deformation parameters, B(E2) values, transition densities, giant resonances
- charge exchange reactions (p,n), (^{3}He,t), (d, ^{2}He), …
  Gamow-Teller strength
- transfer reactions (p,d), (p,t), (p, ^{3}He), (d,p), …
  single particle structure, spectroscopic factors
  spectroscopy beyond the driplines
  neutron pair correlations
  neutron (proton) capture cross sections
- knock-out reactions (p,2p), (p,pn), (p,p ^{4}He)…
  ground state configurations, nucleon momentum distributions, cluster correlations

Constraints and Kinematics

- high revolution freq. compensates thin gas target
- recoils are slow and everywhere
- … but ejectiles are fast and forward focussed

➔ detector concept

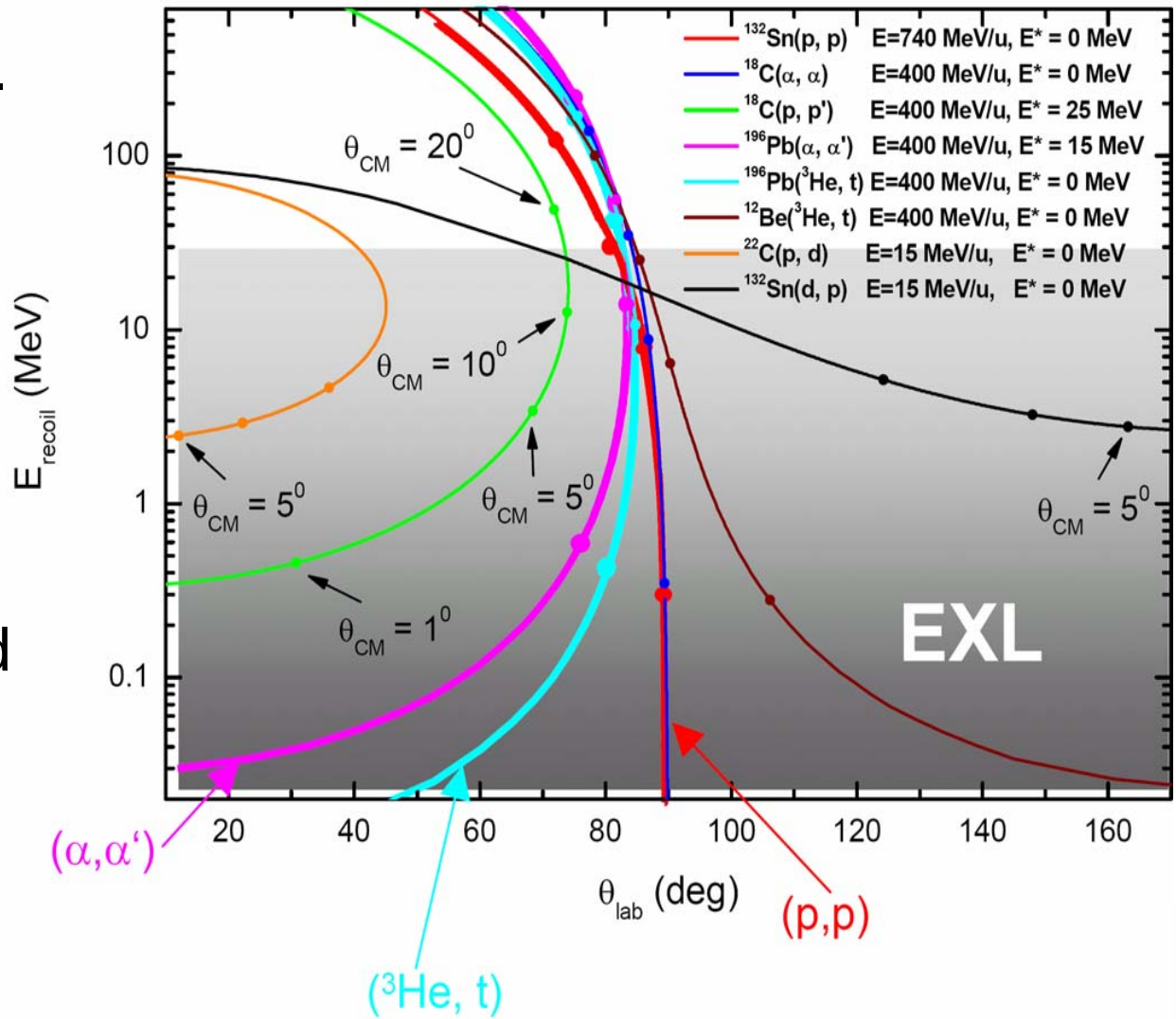

… Detector Setup - Concept and Design Goals …

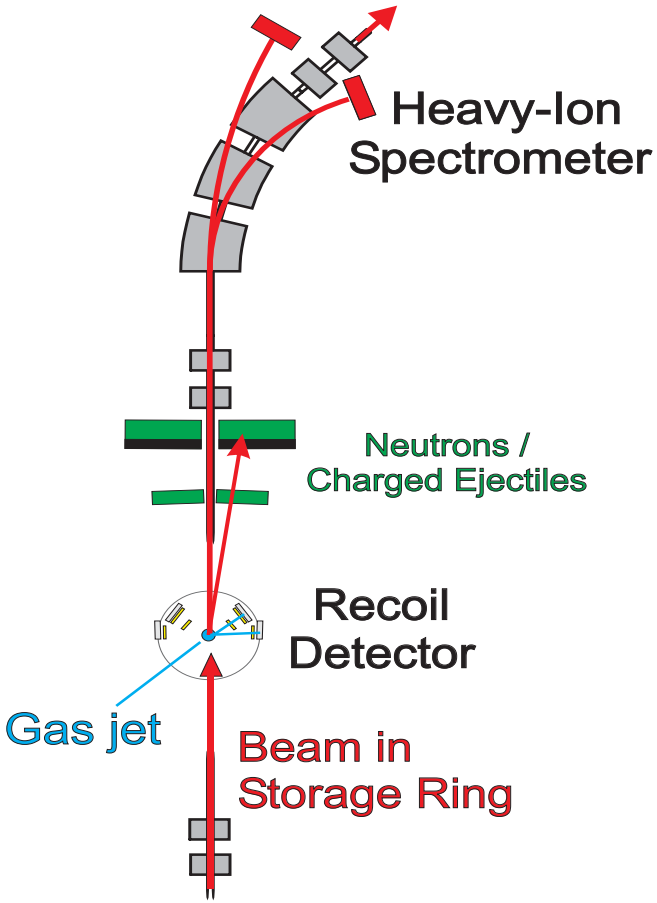

Detection systems for:

i. Target recoils and gammas (p,α,n,γ…)
ii. Forward ejectiles (p,n,γ)
iii. Beam-like heavy ions

Design goals

- Universality: applicable to a wide class of reactions
- High energy and angular resolution
- Fully exclusive kinematical measurements
- Large solid angle acceptance
- UHV compatibility (in part)

i. Recoil and Gamma Array
(already presented by Ignacio Duran and Ian)

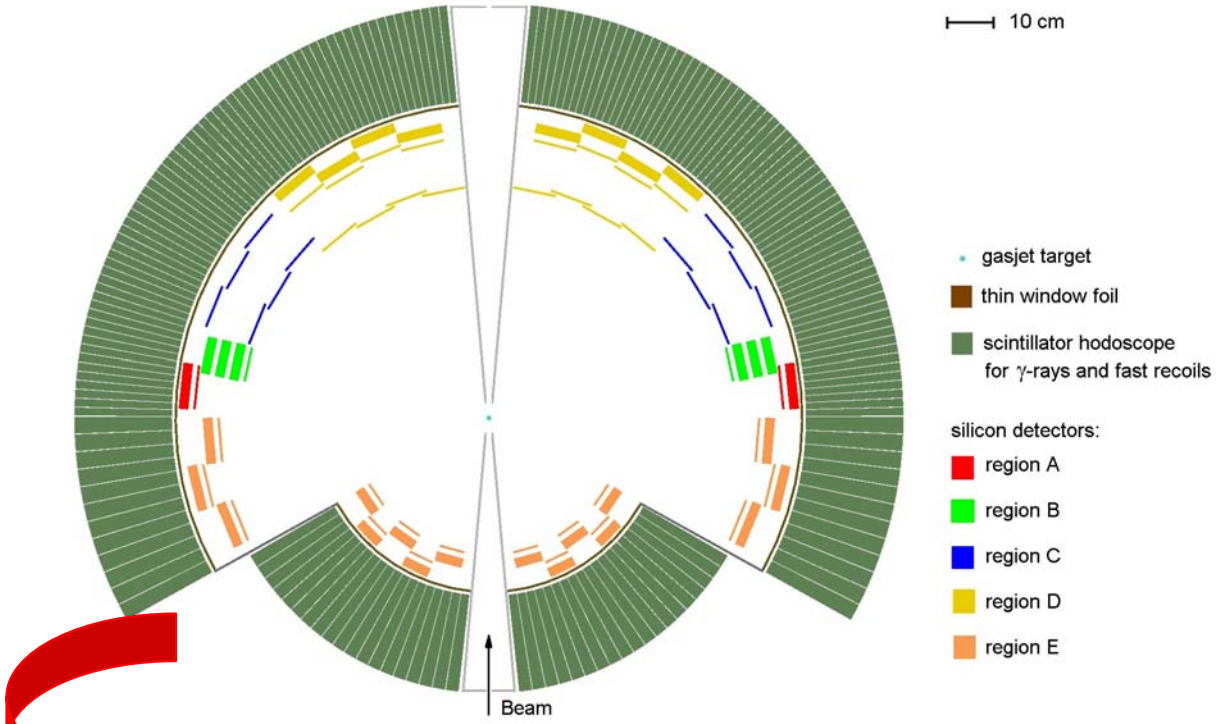

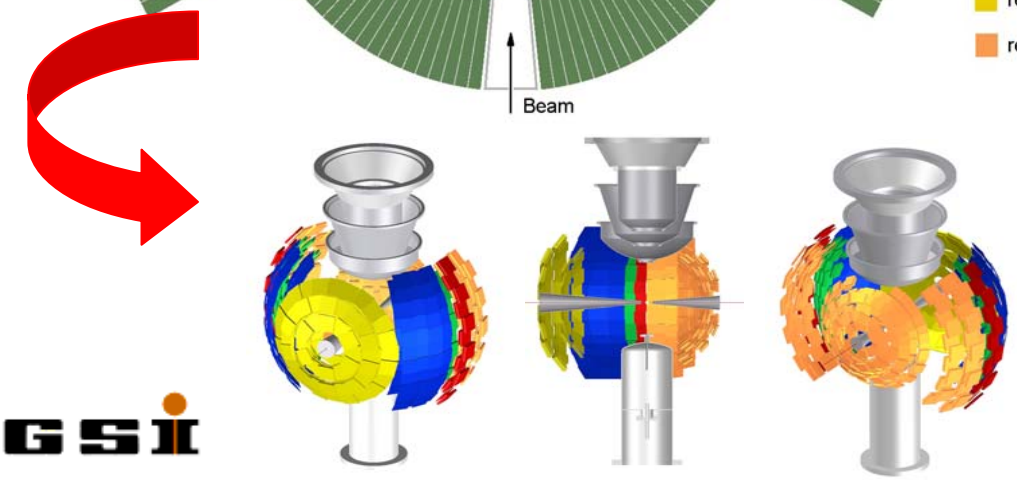

Si DSSD ⇨ **ΔE, x, y**
300 µm thick, spatial resolution better than 500 µm in x and y, ΔE = 30 keV (FWHM)

Thin Si DSSD ⇨ **tracking**
<100 µm thick, spatial resolution better than 100 µm in x and y, ΔE = 30 keV (FWHM)

Si(Li) ⇨ **E**
9 mm thick, large area 100 x 100 mm^2, ΔE = 50 keV (FWHM)

CsI crystals ⇨ **E, γ**
High efficiency, high resolution, 20 cm thick

iii. In-ring instrumentation
(will be presented → ELISe)

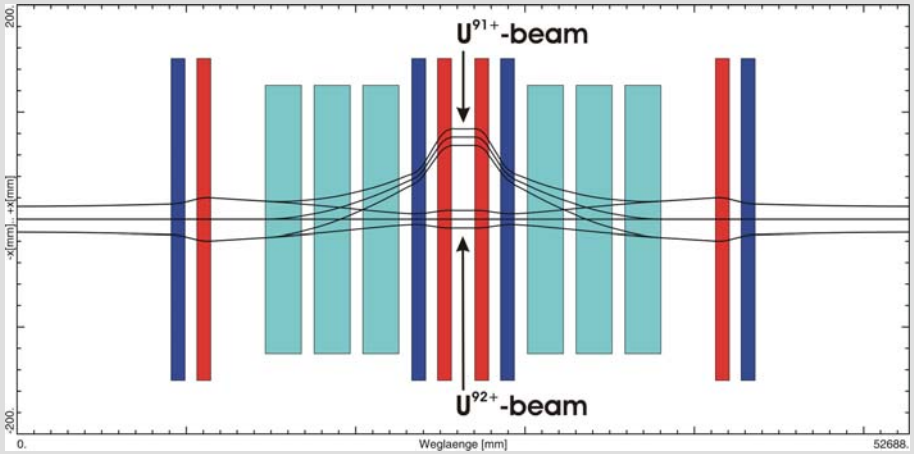

± 50 mrad polar angle coverage

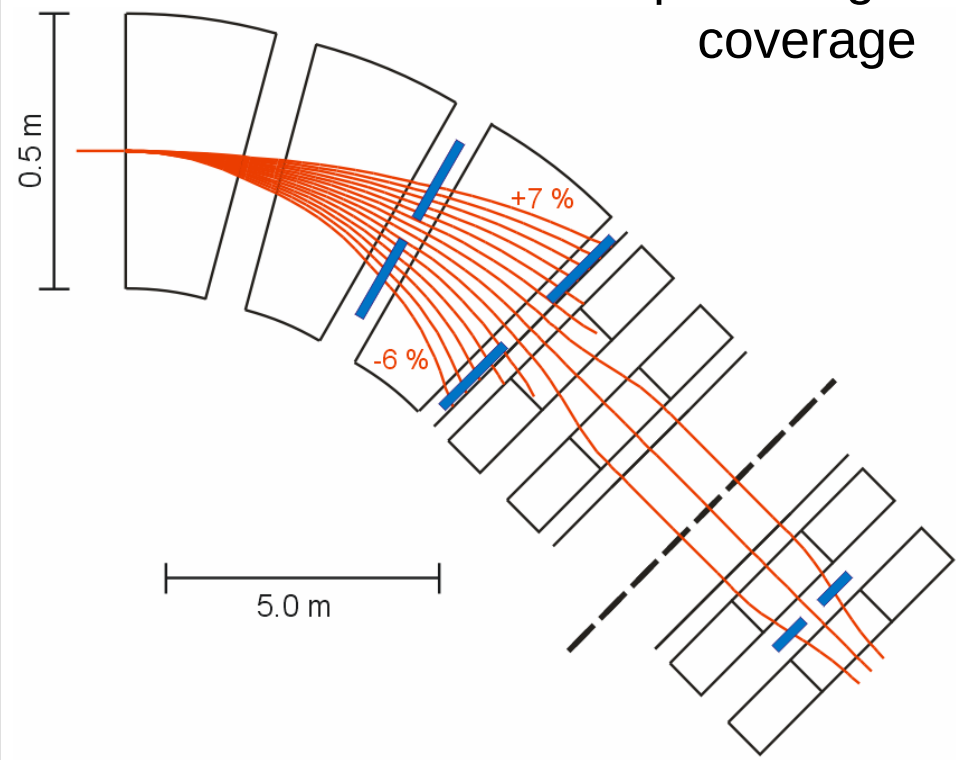

Present ESR:

Separation of U^{92+}/ U^{91+} (ε = .1 mm mrad):	**79 mm**
Separation of U^{92+}/ U^{91+} (ε = 10 mm mrad):	**63 mm**

AIC, ELISe, EXL, SPARC

P.Beller, H. Weick

ii. Forward Ejectile Detector

Kinematically complete measurements:

- detection of forward light particles emitted from the projectile (momenta measured)
- excitation energy of projectile residue, momentum (angular) correlations

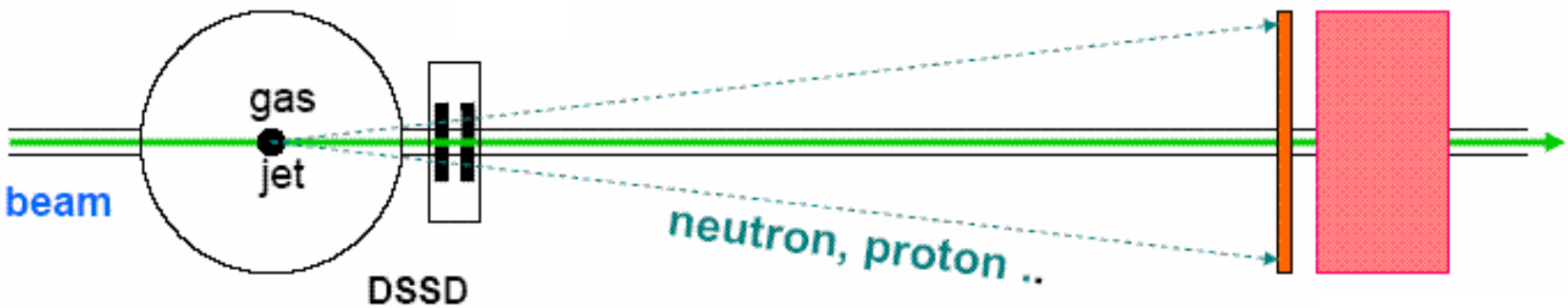

- High-resolution TOF and position measurements
- Full solid angle (forward focus)
- Calorimeter: scintillator + iron converter (similar to LAND)

Large Area Neutron Detector

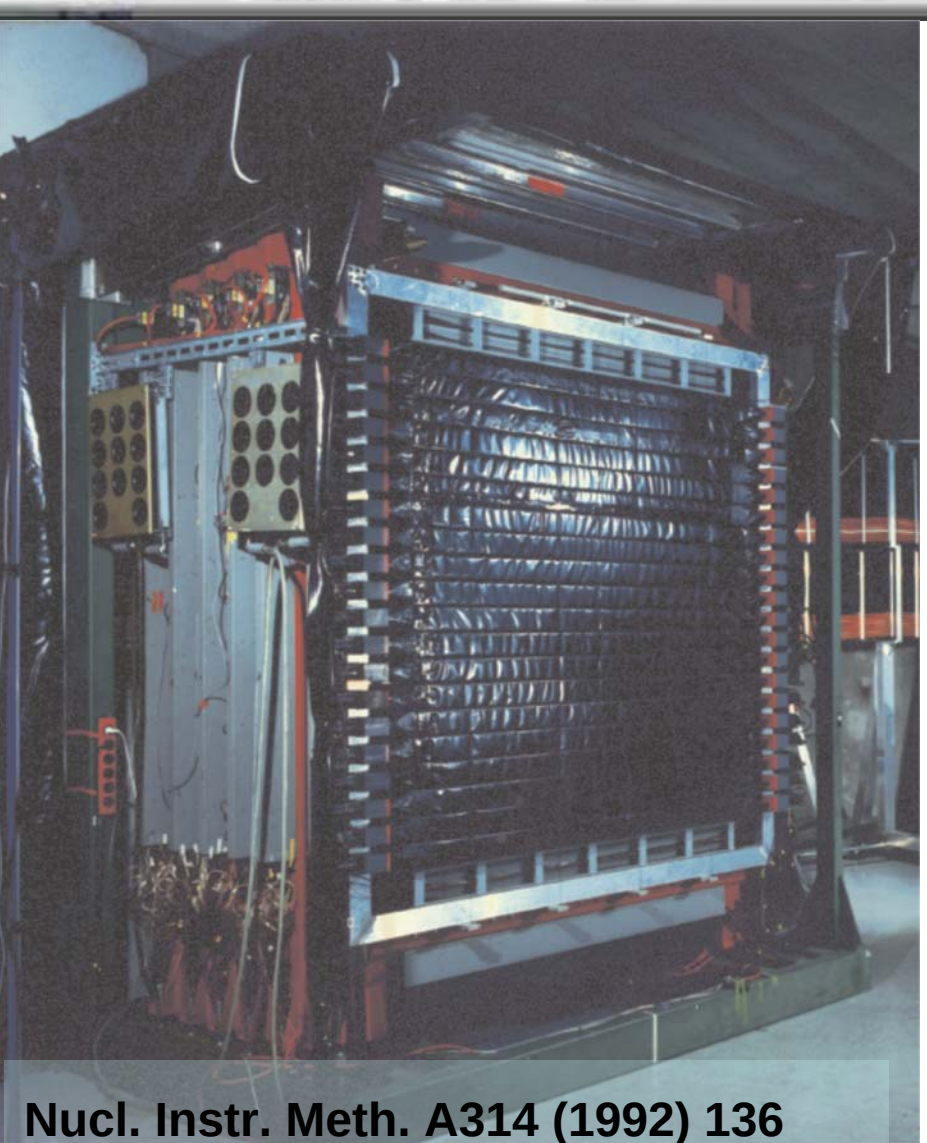

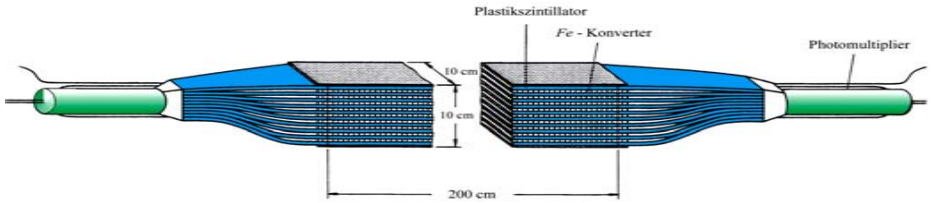

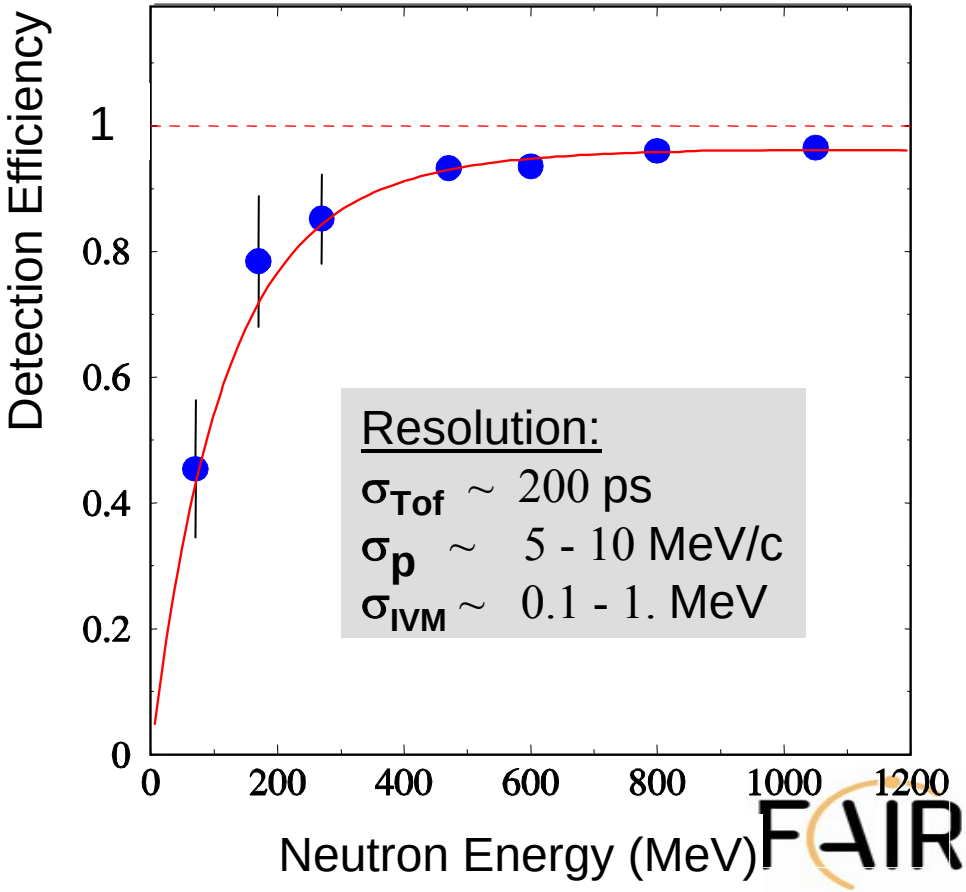

Nucl. Instr. Meth. A314 (1992) 136

Tacquila System (R^3B, FE prototype)

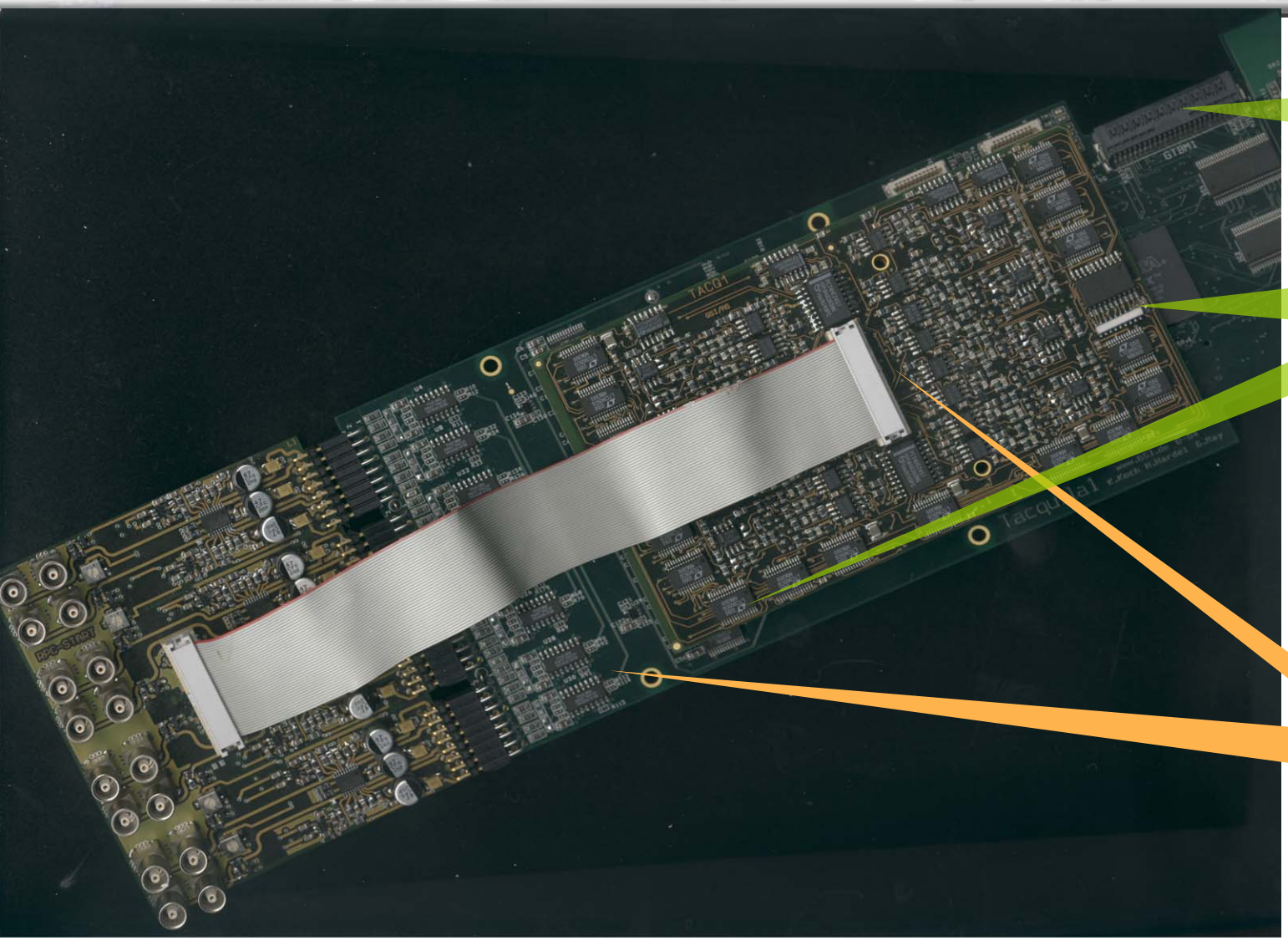

Tacquila System: → TOF

Tac chips
ASIC: FHG Dresden
Concept: GSI

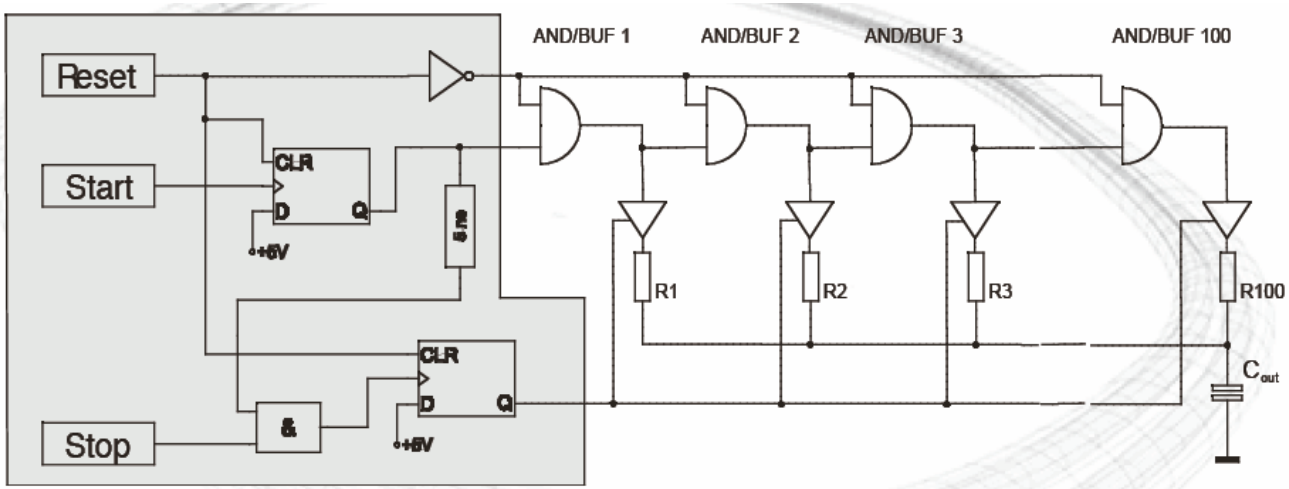

Koch, K.; Hardel, H.; Schulze, R.; Badura, E.; Hoffmann, J.
Nuclear Science Symposium Conference Record, 2004 IEEE
Volume 3, Issue , 16-22 Oct. 2004 Page(s): 1357 - 1359 Vol. 3

Build for FOPI upgrade/CBM RPC prototypes → A. Schüttauf

Tacquila

- **triggered system**

For our application:

- **PM signals (LAND, TOF-wall, …)**
- **+ slow control + monitoring → dedicated front end card**

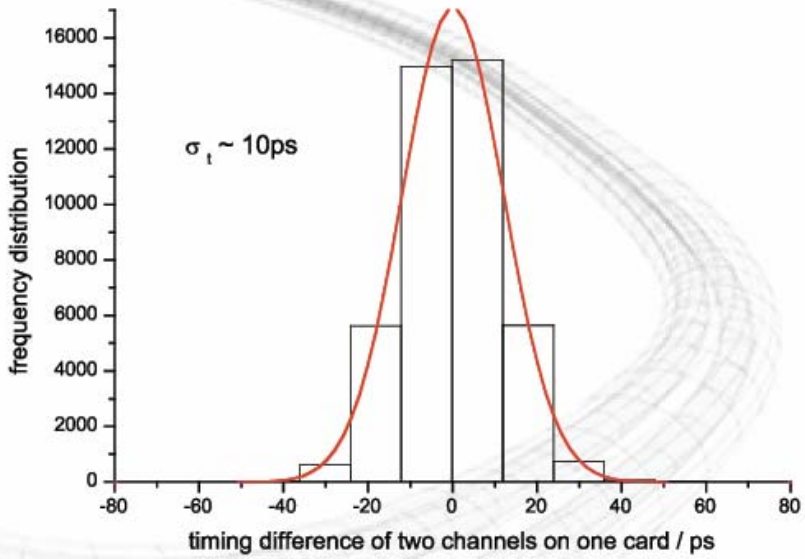

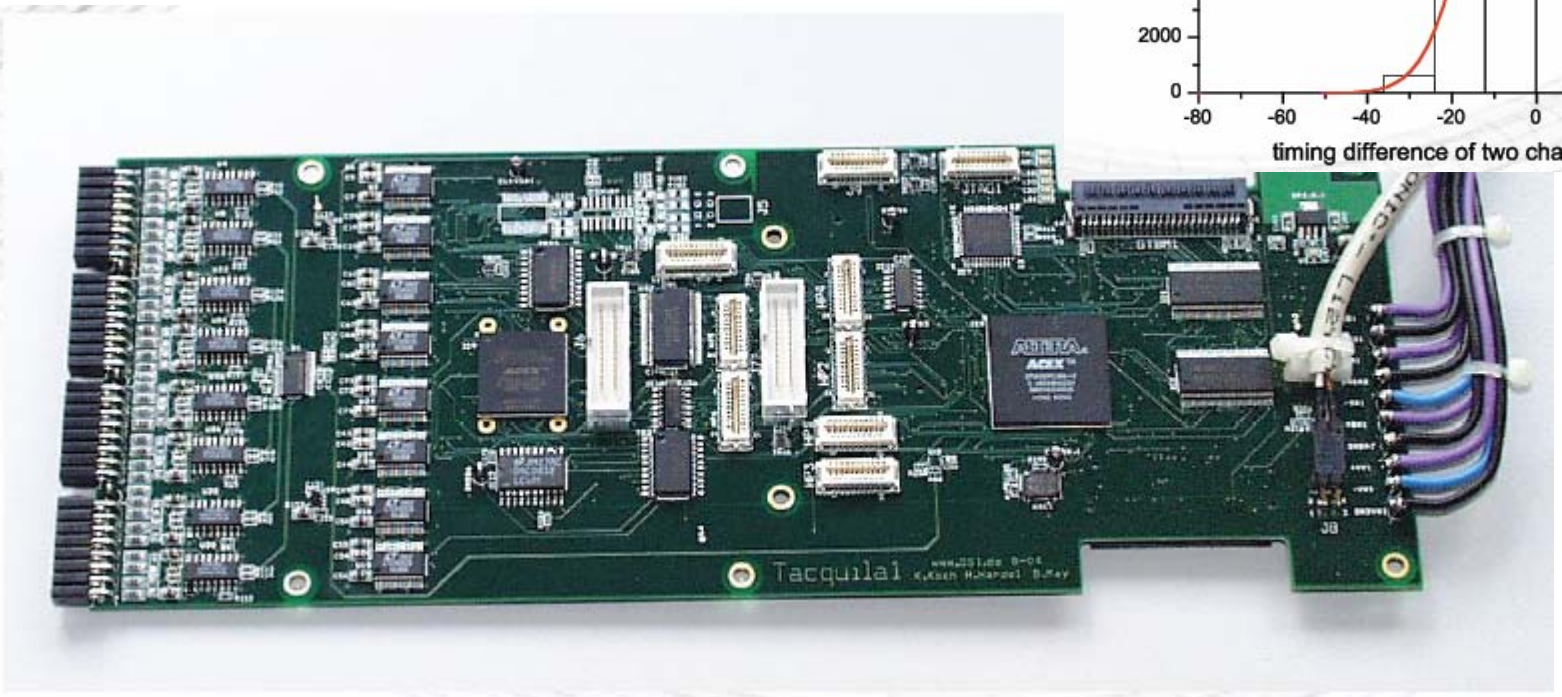

Existing FEC (Front End Card) …

Splitter

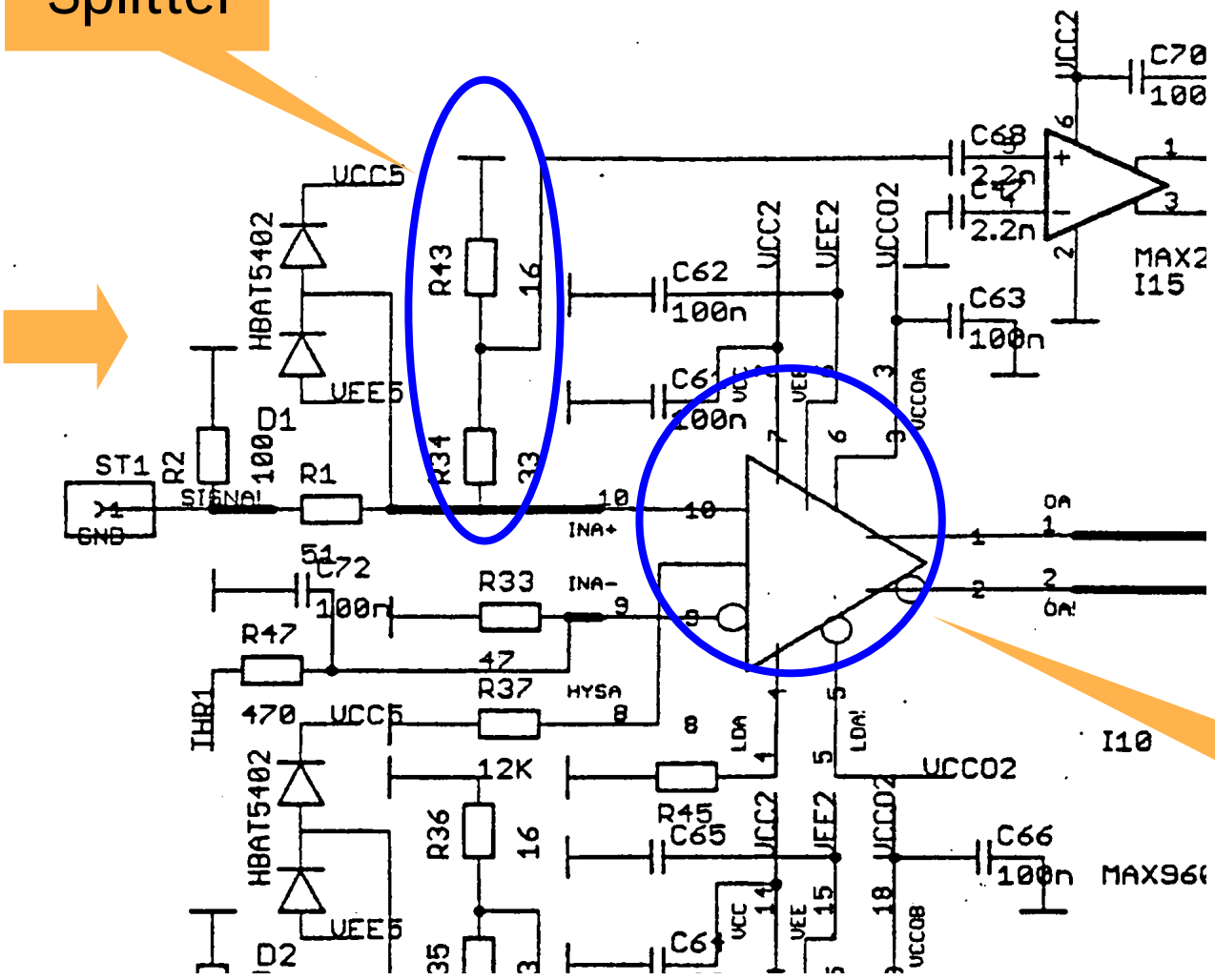

Q

T

Discriminator
(leading edge)

Existing FEC (Front End Card) …

(no) Slow control

Discriminator

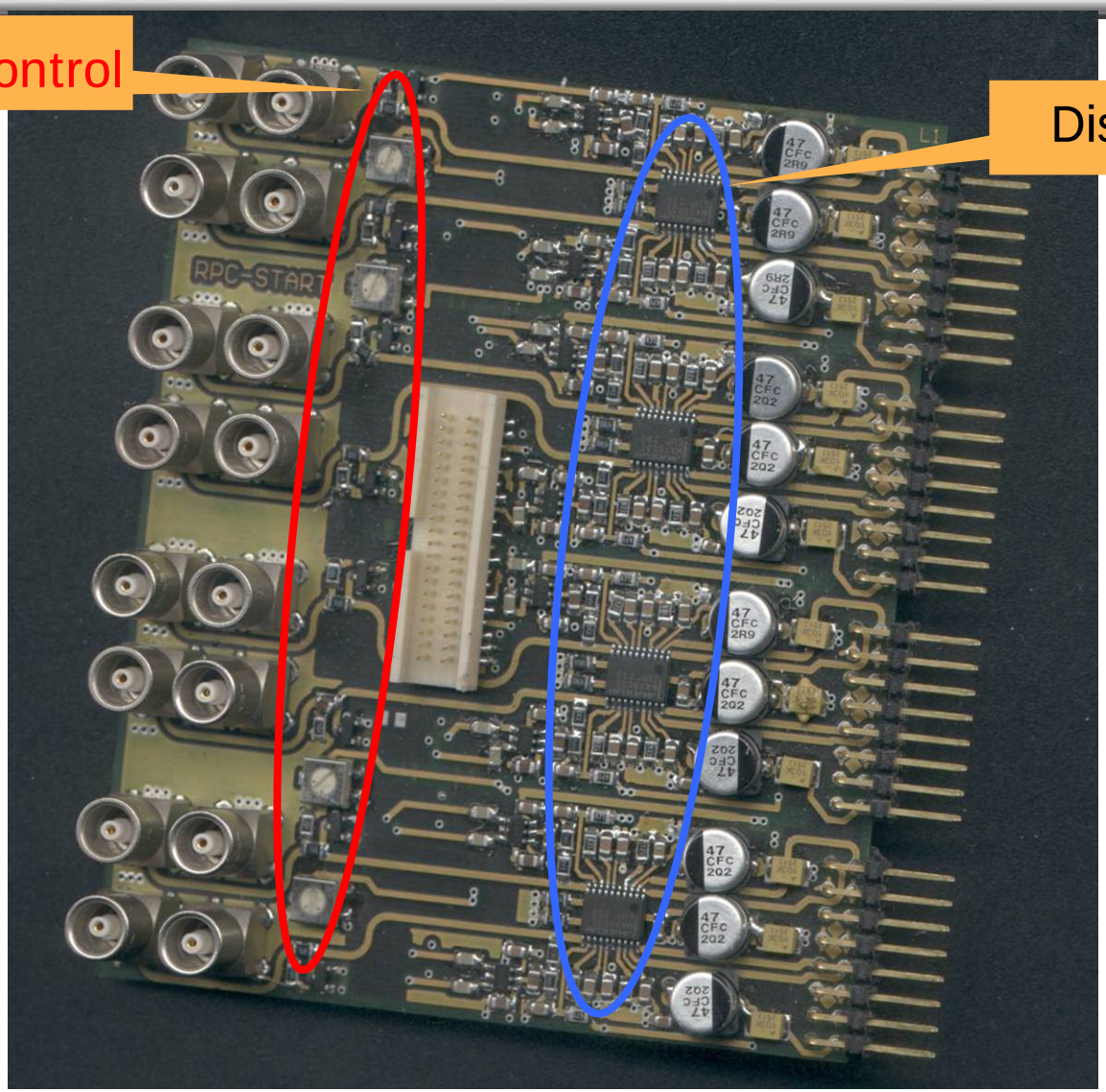

FEE, FEC requirements (general statement) …

- Synchronisation of standalone DAQ systems along the beam line
- Time distribution system (TDS)

- Firmware upload scheme
- Slow control
- Feedback loops

- Monitoring ! (Increasing complexity, no connectors, …)

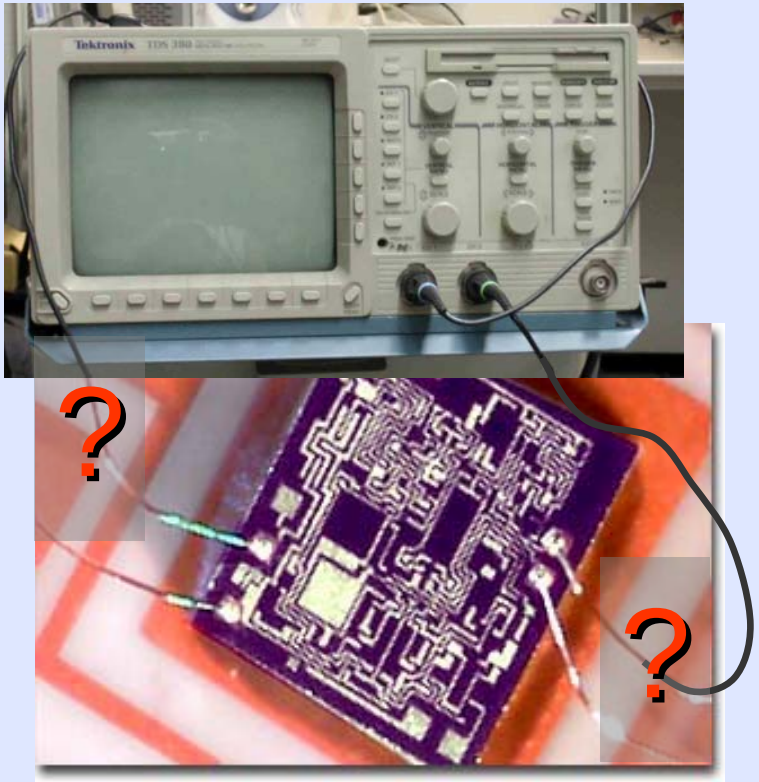

New FEC control card

CPLD: XCR3256XL – 7FT256C / I²C interface to SAM via GTB

pulser/tresholds

+ analog sum
+ dig/anal. MUX
+ timestaps → readout

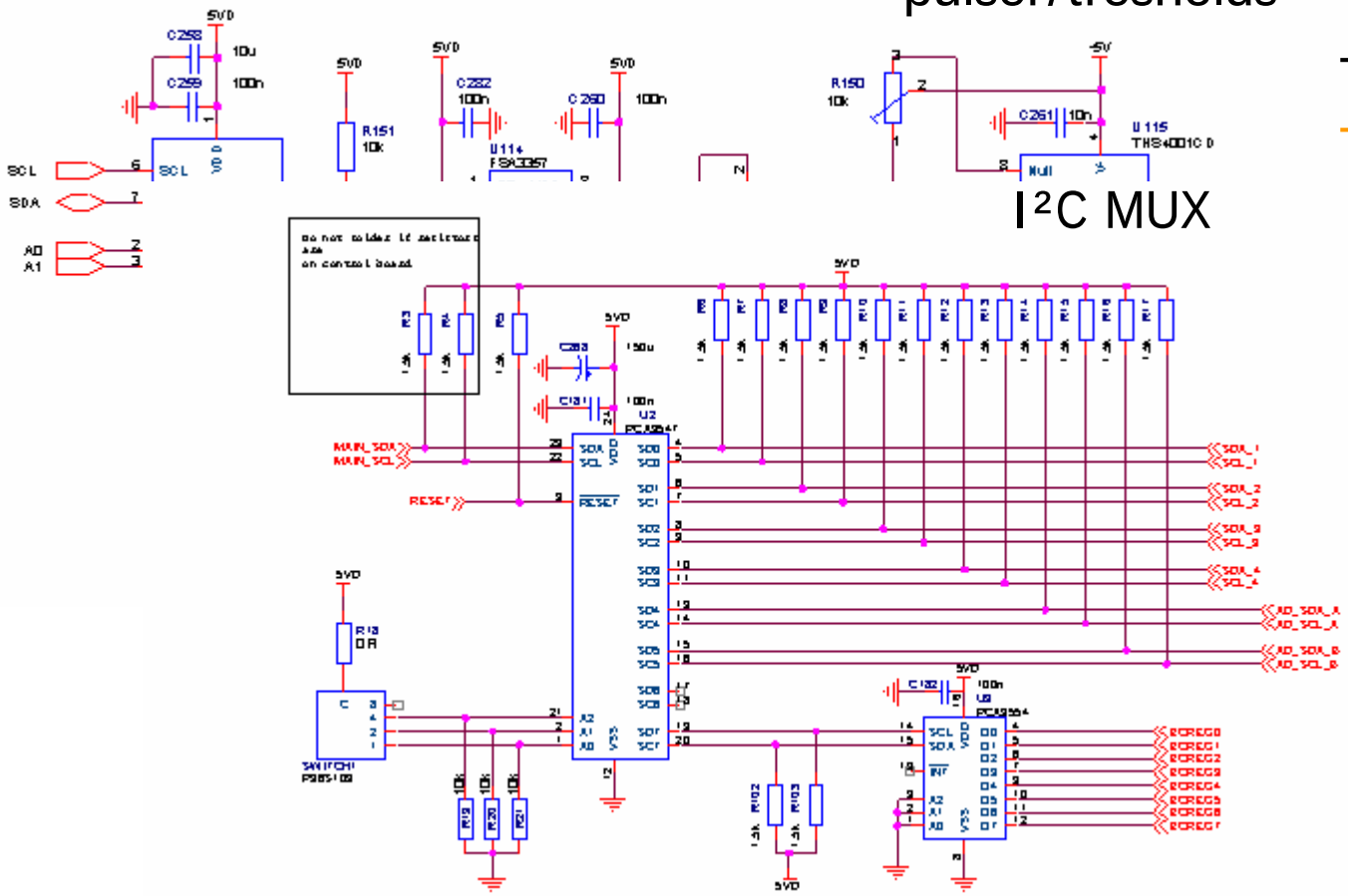

I²C MUX

pile up rej. (I²C)

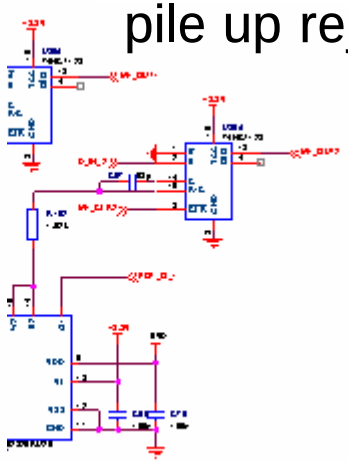

SAM Readout → VME → MBS (readout trigger)

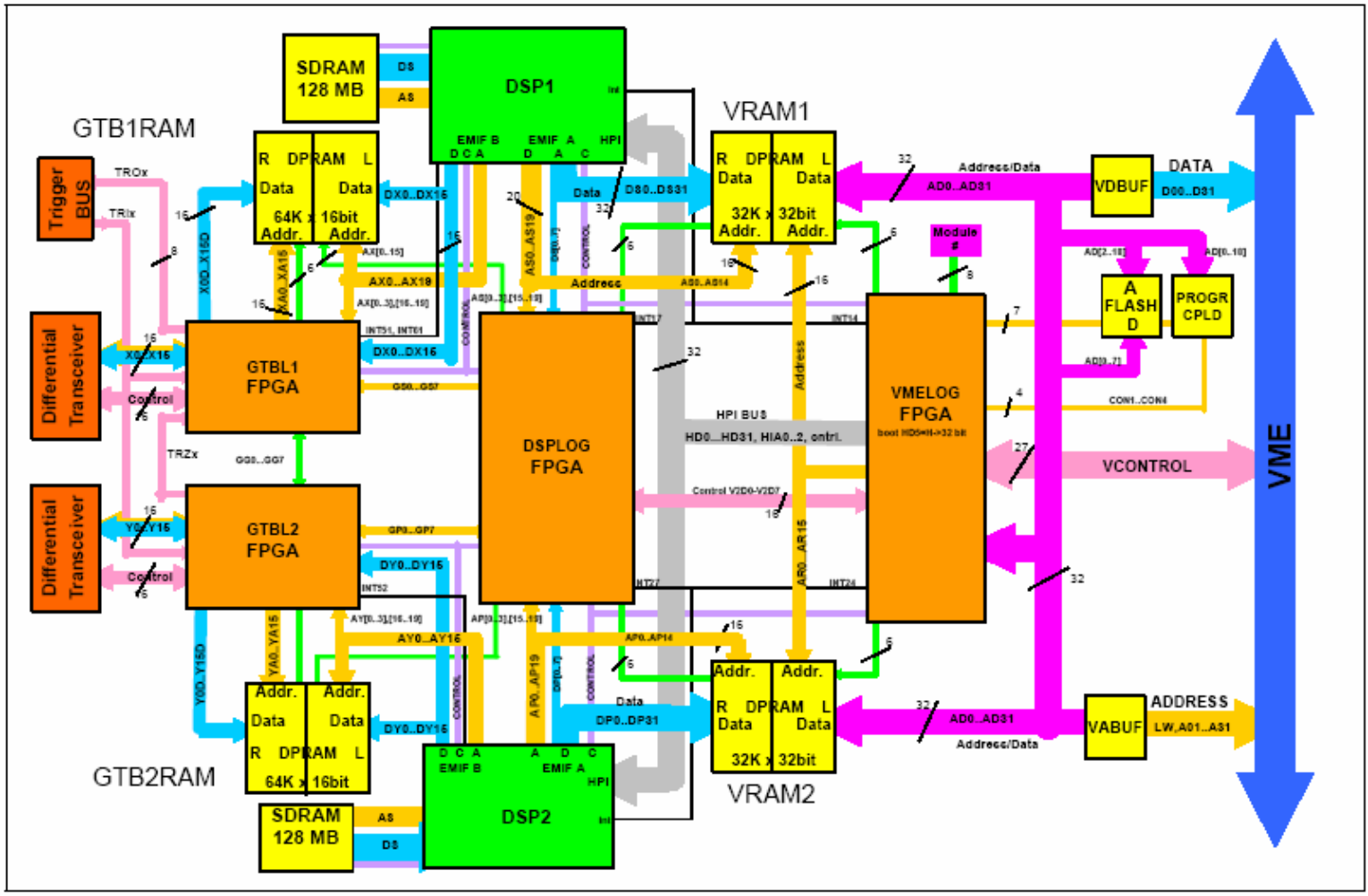

FE Trigger != readout trigger → software

Summary/Outlook

- EXL Neutron detector → LAND detector
- Pure TOF device

- FEE developed for RPC readout can be adapted

□ σ_{TOF} ~ 50-150 ps current LAND: 250 ps

→ RPCs (see R³B n-det)